CHAPTER 7
BRACKET UNIT

BRACKET UNIT 7-1
EXPLODED DIAGRAM 7-1
MANUAL HANDLE 7-1
UPPER CASING 7-2
BOTTOM COWLING 7-4
BRACKET UNIT 7-5
BRACKET UNIT (Manual tilt model) 7-6
BRACKET (Short transom) 7-7
BRACKET (Long transom) 7-8
REMOVAL 7-9
DISASSEMBLY 7-9
INSPECTION 7-9
ANODE 7-9
BRACKET 7-9
TRIM SENSOR 7-9
ASSEMBLY 7-10

HYDRAULIC TILT UNIT 7-11
INSPECTION 7-11

POWER TRIM AND TILT UNIT 7-11
REMOVAL 7-11
EXPLODED DIAGRAM (Short transom [6H308]) 7-12
DISASSEMBLY 7-14
INSPECTION 7-16
TILT-ROD AND TRIM-ROD 7-16
ASSEMBLY 7-16
EXPLODED DIAGRAM (Long transom [6H1-15], [62F-02]) 7-20
DISASSEMBLY 7-22
INSPECTION 7-24
TILT-ROD AND TRIM-ROD 7-24
ASSEMBLY 7-24
FILLING WITH HYDRAULIC FLUID AND AIR-BLEEDING 7-28
HYDRAULIC FLUID PRESSURE TEST 7-28
INSTALLATION 7-30

POWER TRIM AND TILT MOTOR 7-31
DISASSEMBLY 7-31
INSPECTION 7-31
ARMATURE COIL 7-31
BRUSH 7-32
BASE ASSEMBLY 7-32
CIRCUIT BREAKER 7-32
ASSEMBLY 7-33

BRACKET UNIT

EXPLODED DIAGRAM

MANUAL HANDLE

P60TH/60FEHTO*1, P75TH/75CEHTO, 90AEHD*2

① Steering handle
② Bracket
③ Main switch
④ Engine stop switch
⑤ Throttle cable
⑥ Link assembly
⑦ Shift cable
⑧ Cover
⑨ Grip
⑩ Battery cable
⑪ Main switch lead
⑫ Extension wire lead
⑬ PTT switch (PTT model)
⑭ Steering friction (PTT model)

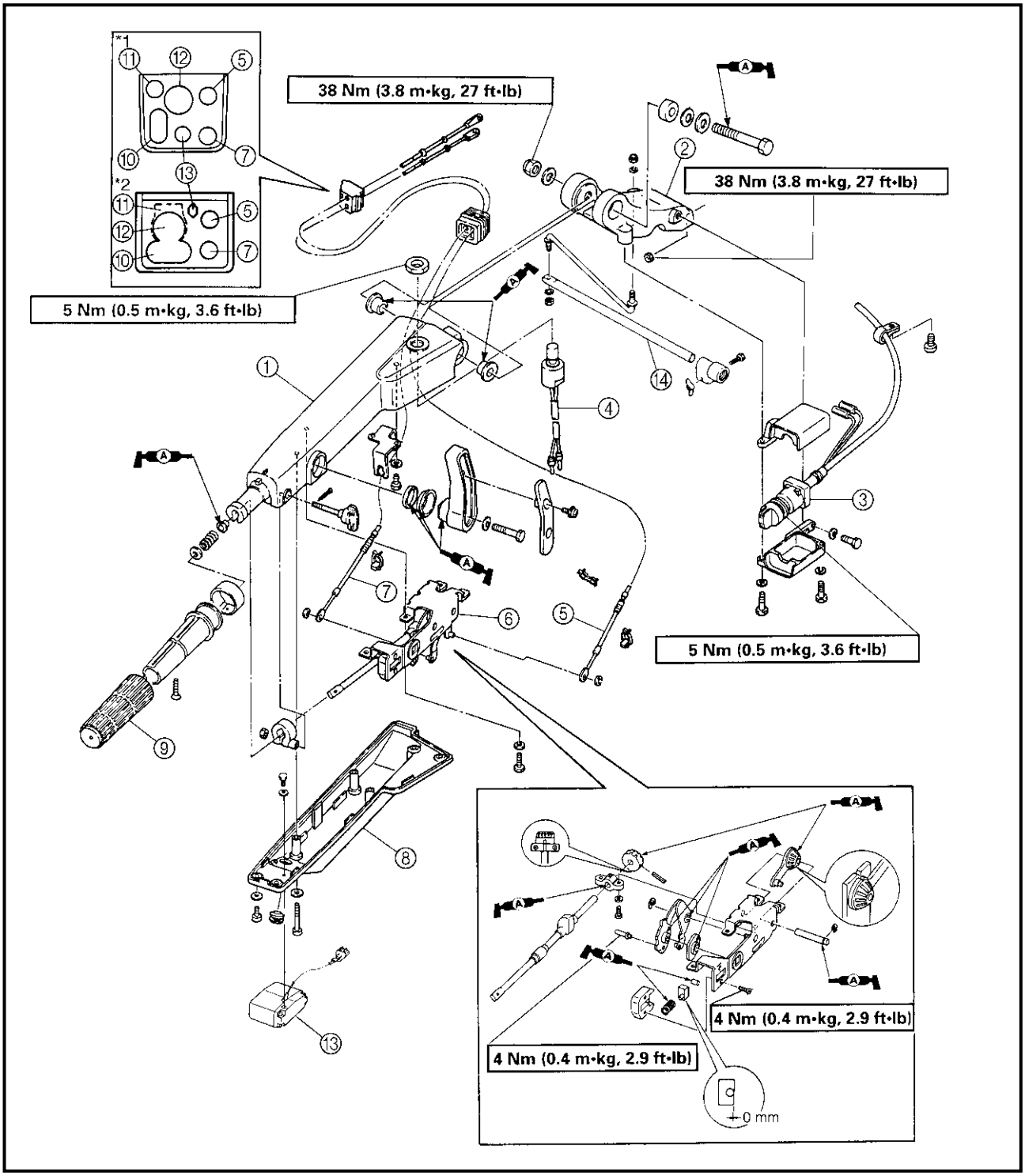

K15000-0

UPPER CASING
50, 60, 70 hp

① Exhaust guide
② Exhaust manifold
③ Muffler
④ Upper case
⑤ Apron
⑥ Seal
⑦ Bottom cowling

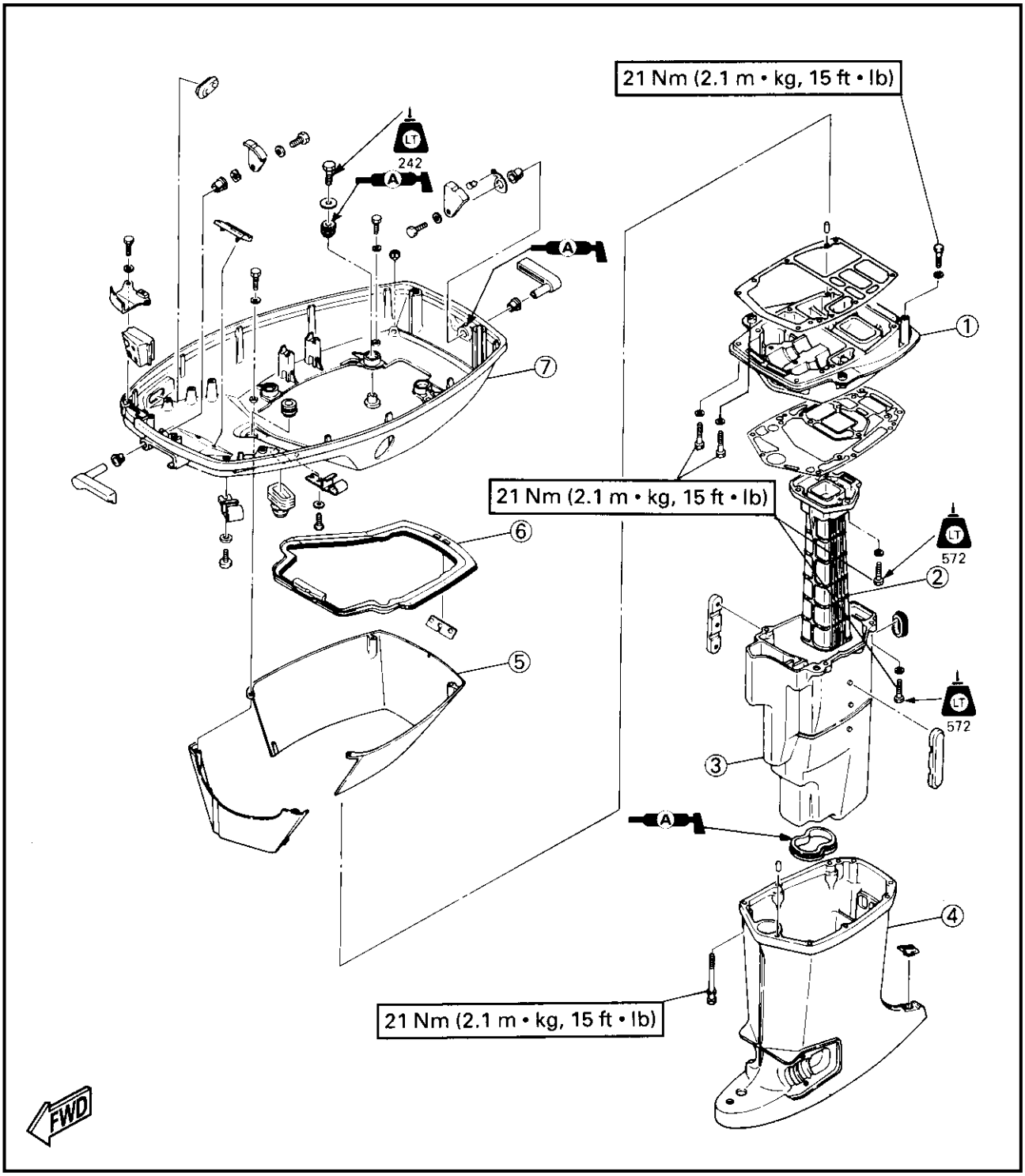

75, 80, 90 hp

① Exhaust guide
② Exhaust manifold
③ Muffler
④ Upper case
⑤ Apron
⑥ Seal
⑦ Bottom cowling

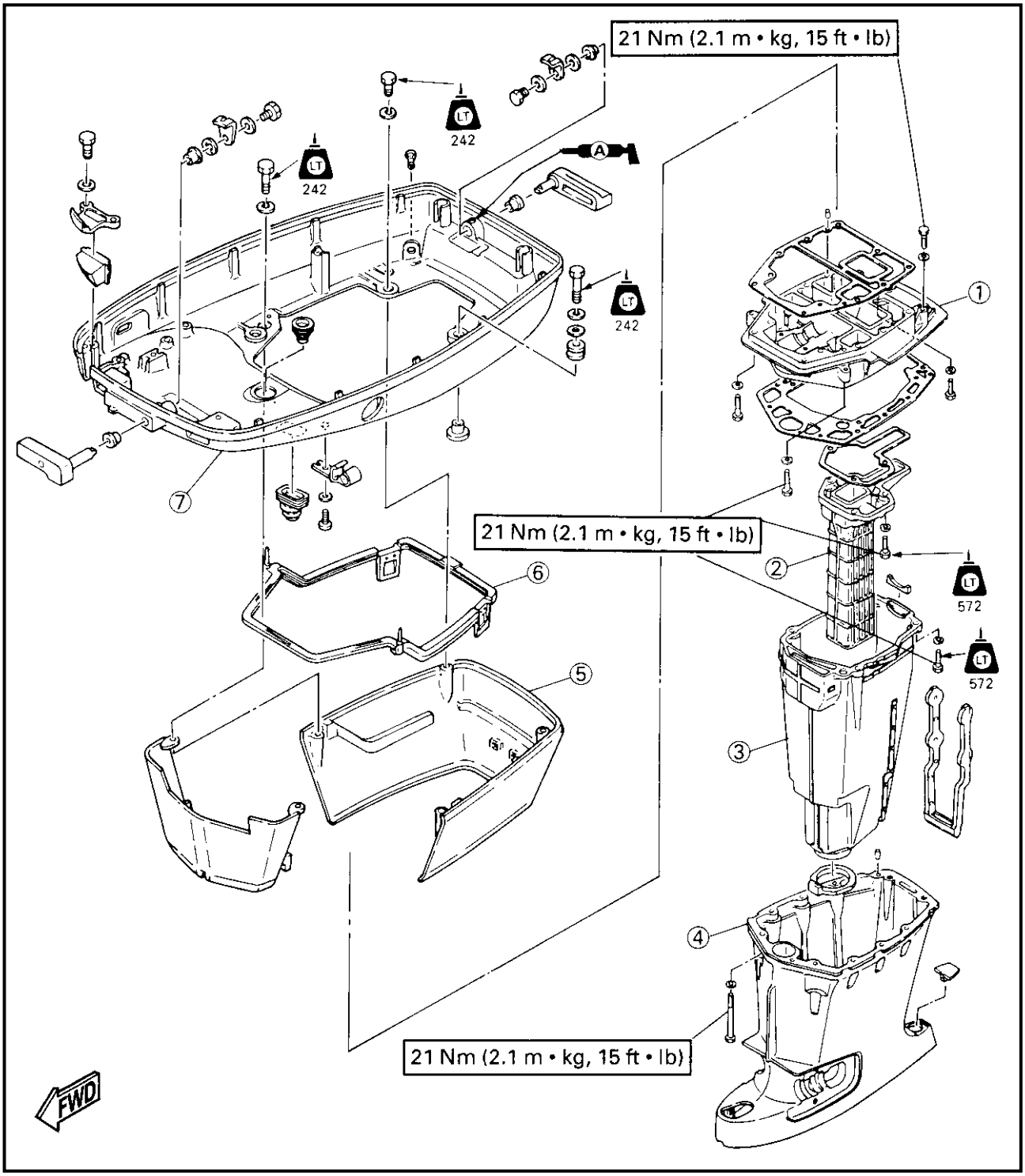

K-15300-0

BOTTOM COWLING

① Power trim and tilt motor lead (PTT model)
② Trim sender lead (PTT model)
③ Grommet
④ Flushing kit (B90TR/90AETO)
⑤ Clamp (PTT model)
⑥ Bottom cowling fitting plate
⑦ Shift actuator

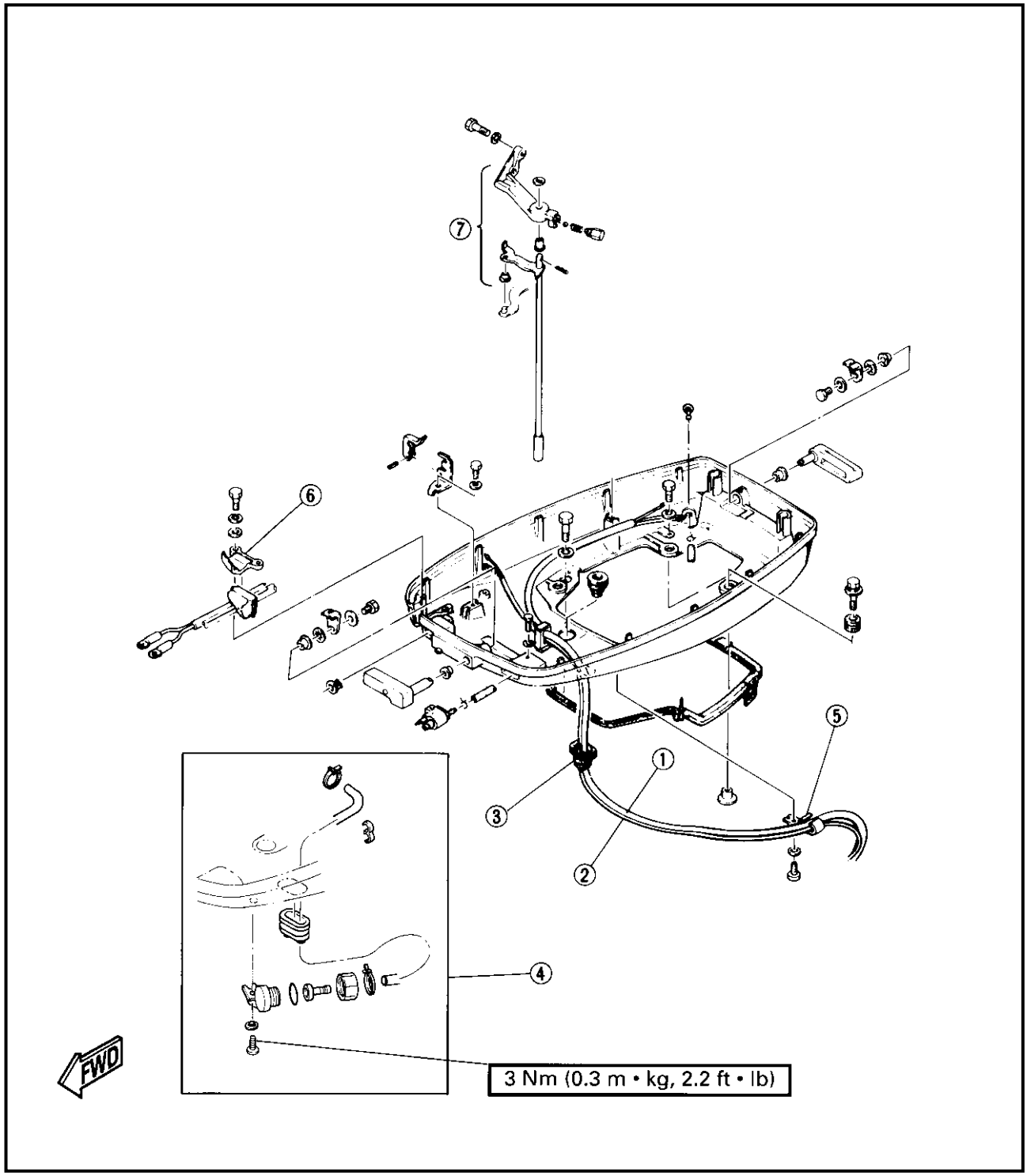

K-15600-0

BRACKET UNIT

① Upper mount rubber cover
② Cap
③ Upper mount rubber nut
④ Screw
⑤ Low mount rubber cover
⑥ Ground lead
⑦ Bolt
⑧ Mount rubber housing
⑨ Lower mount rubber nut
⑩ Anode (PTT model)
⑪ Read wire (PTT model)

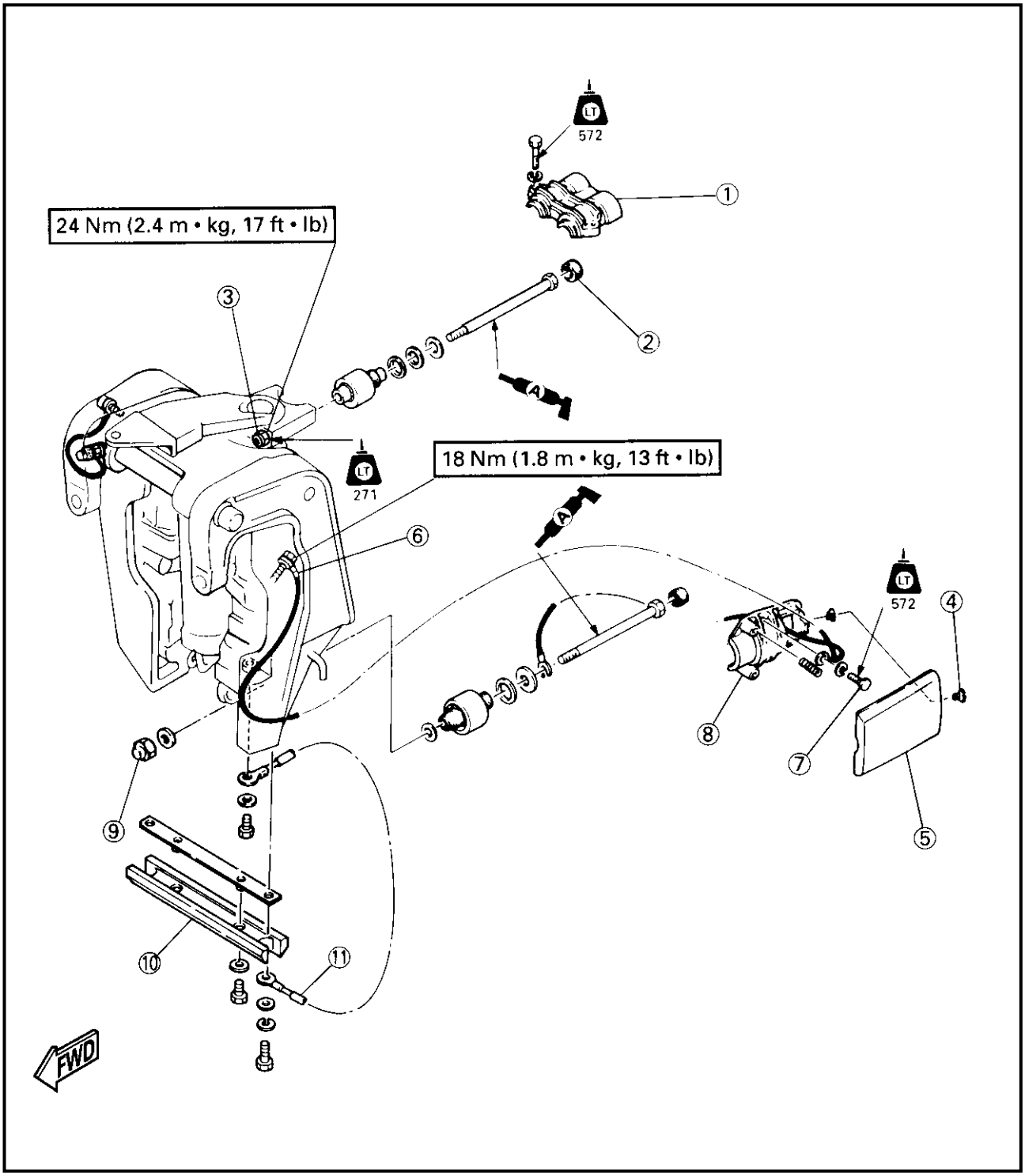

BRACKET UNIT (Manual tilt model)

① Tilt unit
② Tilt lever
③ Clamp bracket spacer
④ Lower shock mount pin
⑤ Bushing

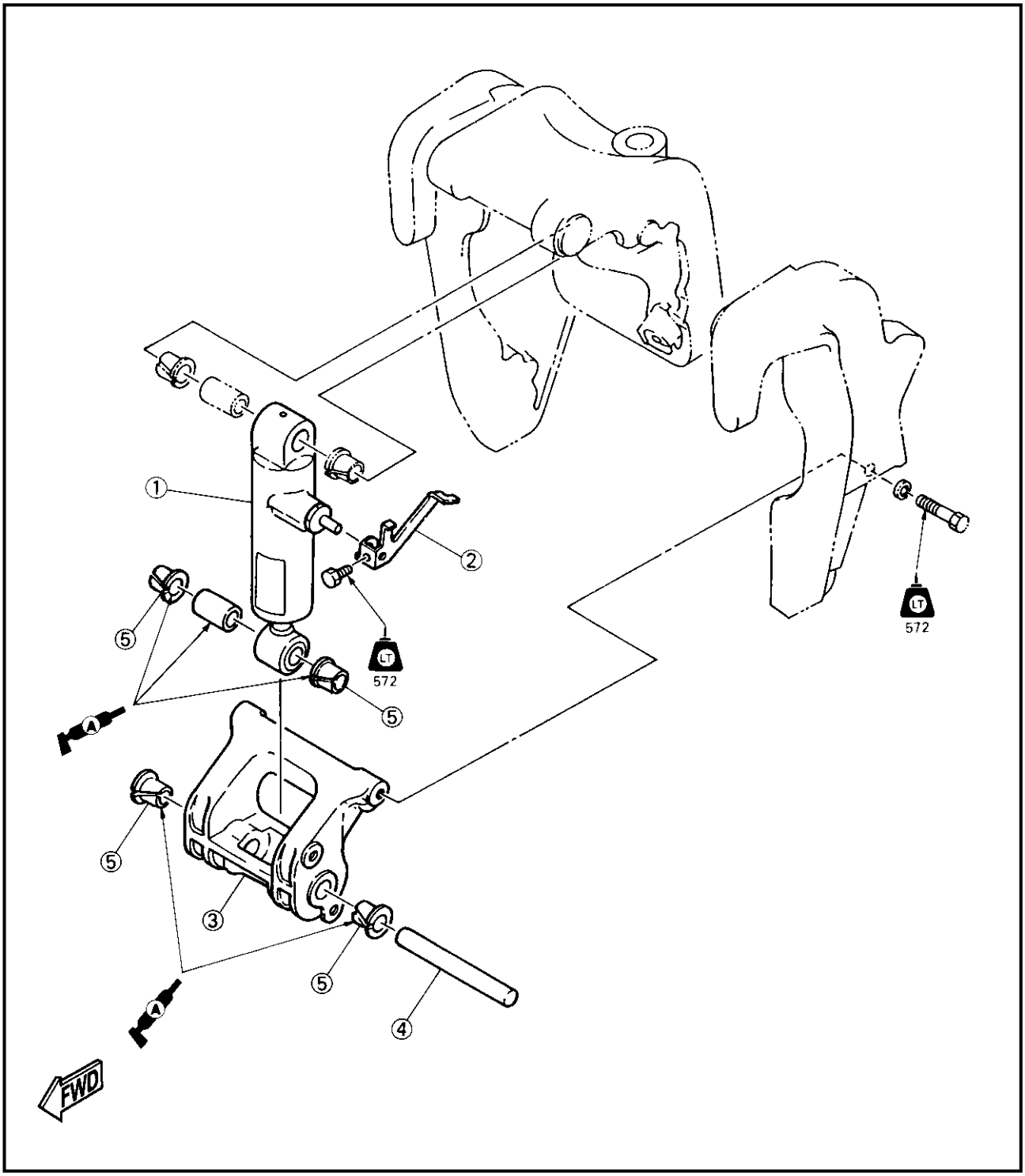

K15900-0

BRACKET (Short transom)

① Circlip
② Lower mounting housing
③ Steering pivot shaft
④ Bushing
⑤ O-ring
⑥ Bushing
⑦ Grease nipple
⑧ Ground lead
⑨ Tilt rod (manual tilt model)
⑩ Clamp bracket nut
⑪ Bolt (6 bolts)
⑫ Clamp bracket bolt
⑬ Washer
⑭ Bushing
⑮ Clamp bracket
⑯ Trim sensor (PTT model)
⑰ Circlip
⑱ Pin
⑲ Bushing
⑳ Power trim and tilt unit (PTT model)
㉑ Cotter pin
㉒ Tilt lock lever
㉓ Bushing
㉔ Washer
㉕ Spring
㉖ Collar

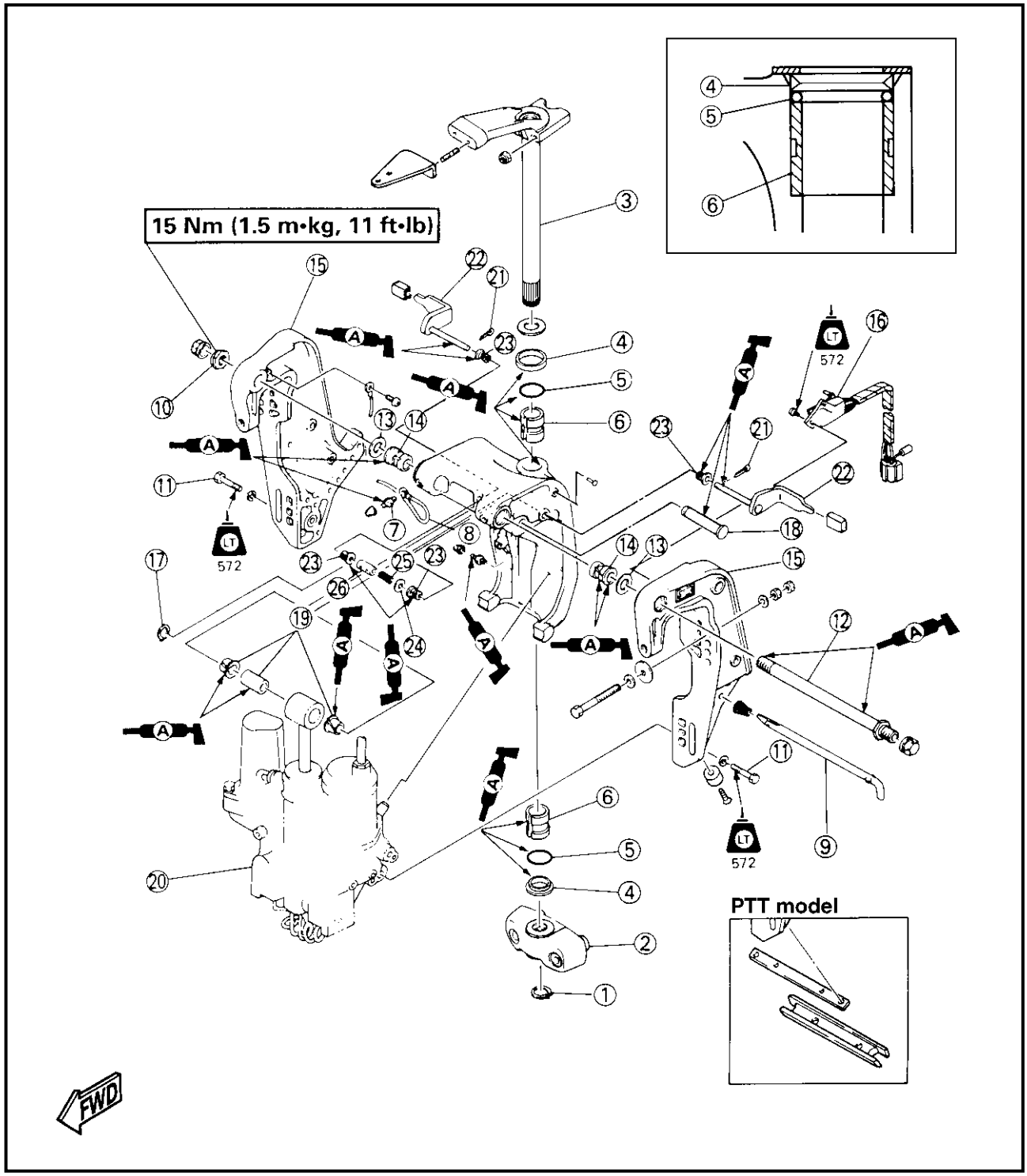

K15900-0

BRACKET (Long transom)

① Circlip
② Lower mounting housing
③ Steering pivot shaft
④ Bushing
⑤ O-ring
⑥ Bushing
⑦ Grease nipple
⑧ Ground lead
⑨ Tilt rod (manual tilt model)
⑩ Clamp bracket nut
⑪ Bolt (6 bolts)
⑫ Clamp bracket bolt
⑬ Washer
⑭ Bushing
⑮ Clamp bracket
⑯ Trim sensor (PTT model)
⑰ Circlip
⑱ Pin
⑲ Bushing
⑳ Power trim and tilt unit (PTT model)
㉑ Tilt lock lever
㉒ Bushing
㉓ Spring
㉔ Collar

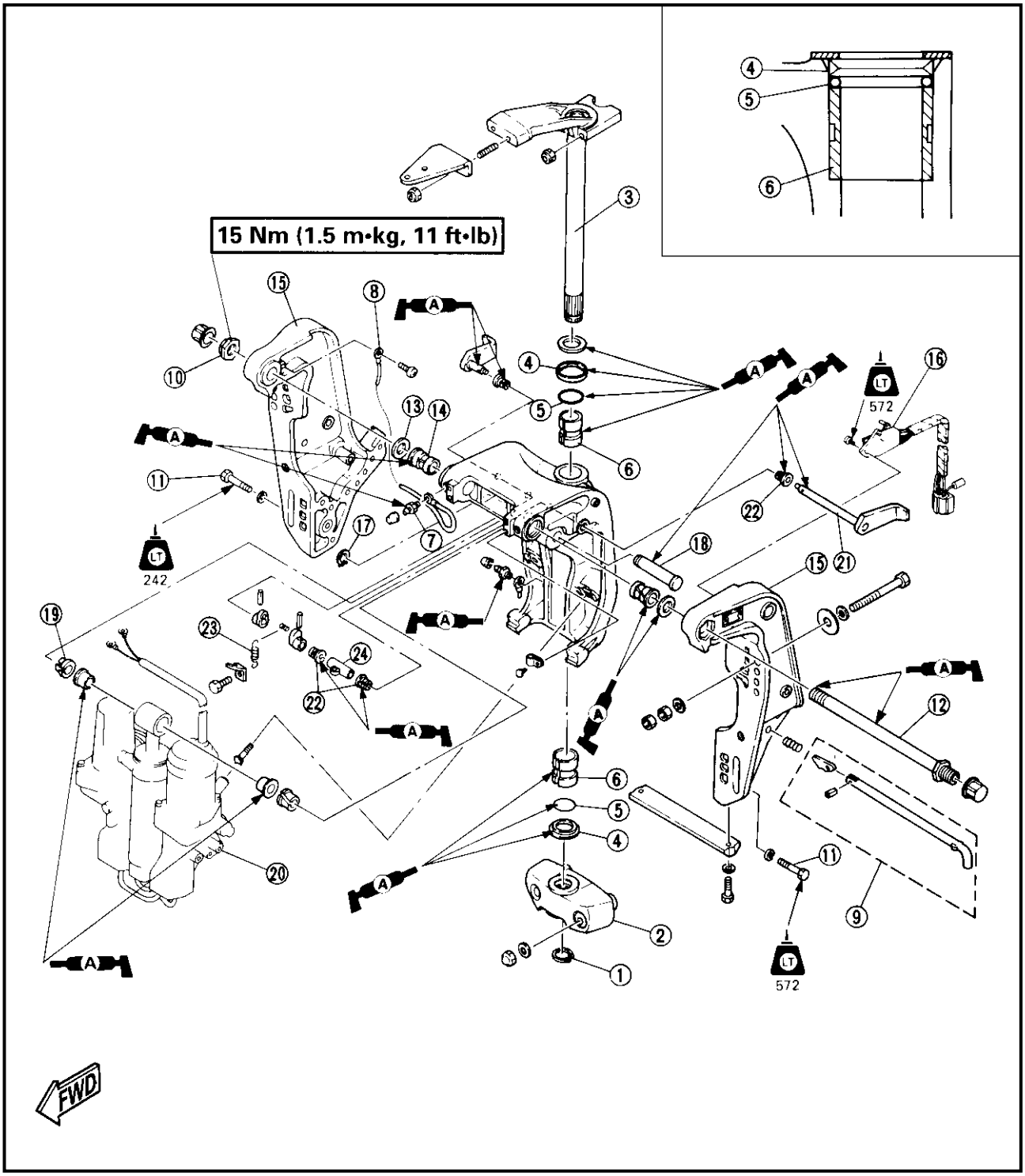

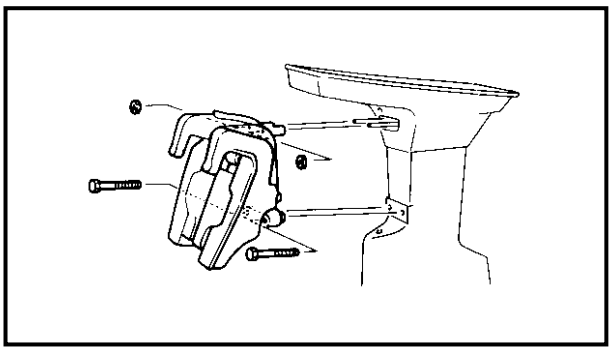

K20002-0

REMOVAL

1. Remove the power-head.
2. Remove the swivel-bracket from the upper casing.

CAUTION:

Lay the outboard motor on the floor to carry out this removal.

DISASSEMBLY

1. Referring to the exploded diagram, disassemble the bracket unit.

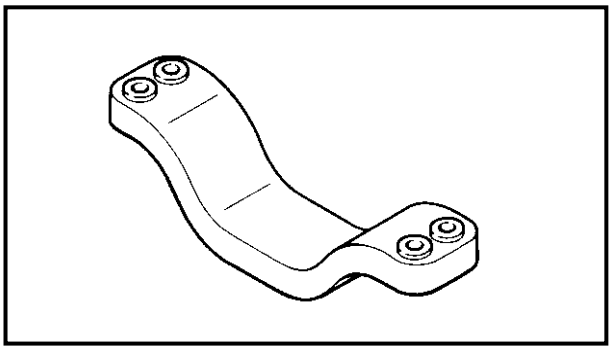

INSPECTION

ANODE

1. Check anode and replace with new one when the size is less than 1/3 of original length.

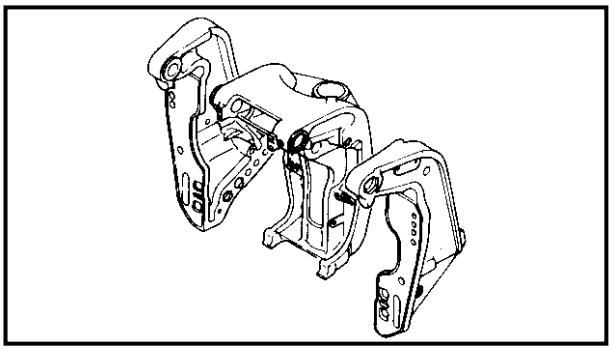

BRACKET

1. Inspect the bracket and replace them, if cracked.

TRIM SENSOR

1. Check resistance of the new trim sensor.

Trim sensor resistance:
Pink – Black
360 ~ 540 Ω
Black – Orange
800 ~ 1200 Ω

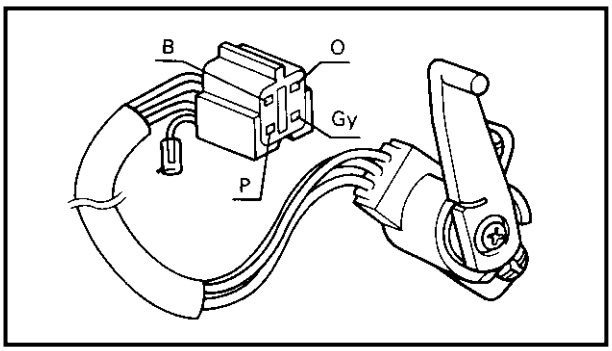

2. Measure resistance between black and pink leads to check that the value changes gradually in the whole trim and tilt range. If not, replace trim sensor with new one.

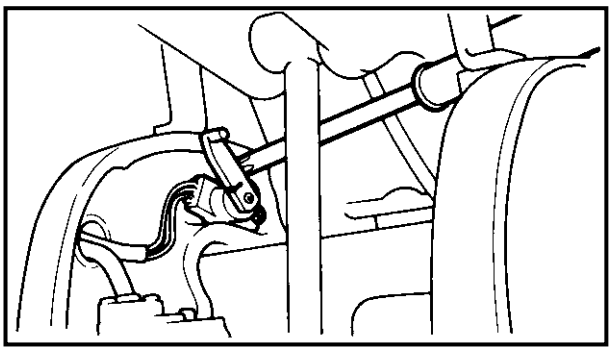

Trim sensor adjustment
Fully tilt up the outboard motor.
Loosen the two bolts securing the trim sensor until it moves slightly.

⚠ WARNING

Be sure to support the engine with the tilt support lever while loosening the bolts to prevent the engine from tilting down due to lack of oil pressure.

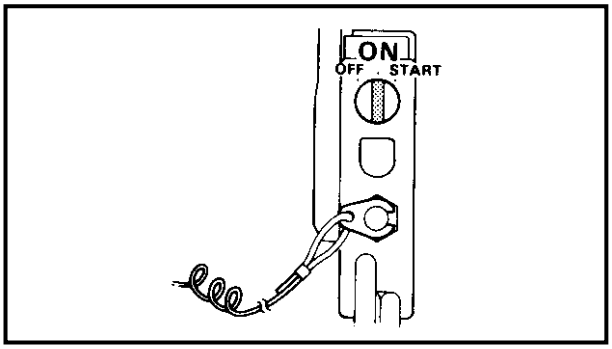

Fully tilt down the outboard motor.

Connect battery cables of the outboard motor to a battery and set the main switch to "ON".

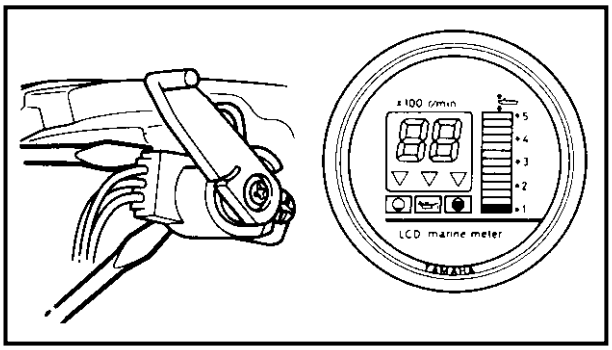

Adjust the trim sensor position by pushing a screw driver so that one segment on the trim indicator on the digital meter goes on.

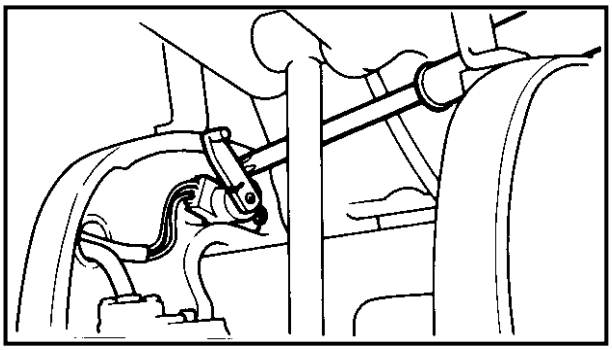

Tilt up the outboard motor and tighten both installation bolts.

⚠ WARNING

Be sure to support the engine with the tilt support lever while tightening the bolts to prevent the engine from tilting down due to lack of oil pressure.

ASSEMBLY

1. Referring to the exploded diagram, assemble the bracket unit.

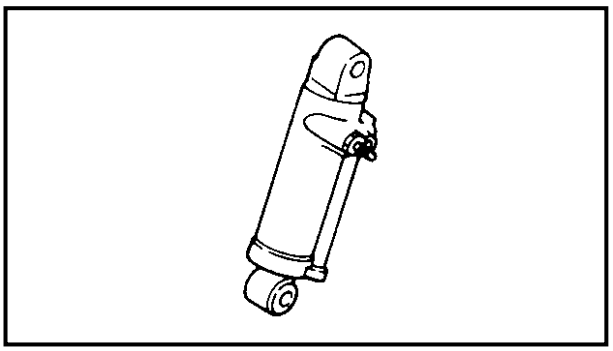

HYDRAULIC TILT UNIT

⚠ WARNING

This cylinder is highly pressurized. Therefore, never overhaul or damage it.

INSPECTION

1. Inspect the tilt cylinder assembly for scratches or corrosion.
   If any scratches are found, replace the tilt cylinder assembly.

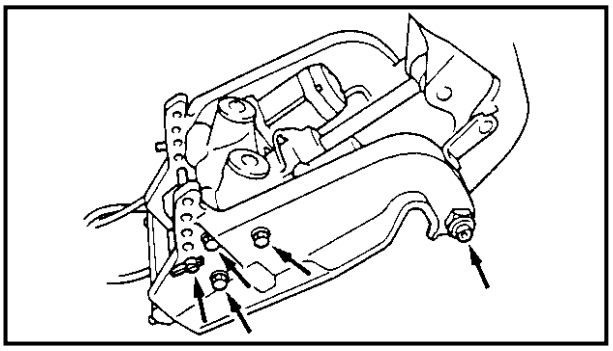

POWER TRIM AND TILT UNIT

REMOVAL

1. Disconnect the leads from the relay in the bottom cowling.
2. Remove the tilt-rod, bolts and nut, and the clamp-bracket.
3. Remove the circlip and the complete power trim and tilt unit.

K51000-0

EXPLODED DIAGRAM (Short transom [6H308])

① Reservoir body
② Reservoir plug
③ Motor assembly
④ Trim cylinder end screw
⑤ Trim piston assembly
⑥ Valve seat screw
⑦ Main valve assembly
⑧ Shuttle piston
⑨ Pipe
⑩ Down relief valve seat
⑪ Down relief spring
⑫ Gear pump assembly
⑬ Shaft connector
⑭ Filter 2
⑮ Up relief valve lock screw
⑯ Up relief spring
⑰ Up relief valve seat
⑱ Filter 1
⑲ Manual valve seat
⑳ Manual release spring
㉑ Adapter
㉒ Free piston
㉓ Back-up ring 2
㉔ Tilt cylinder assembly

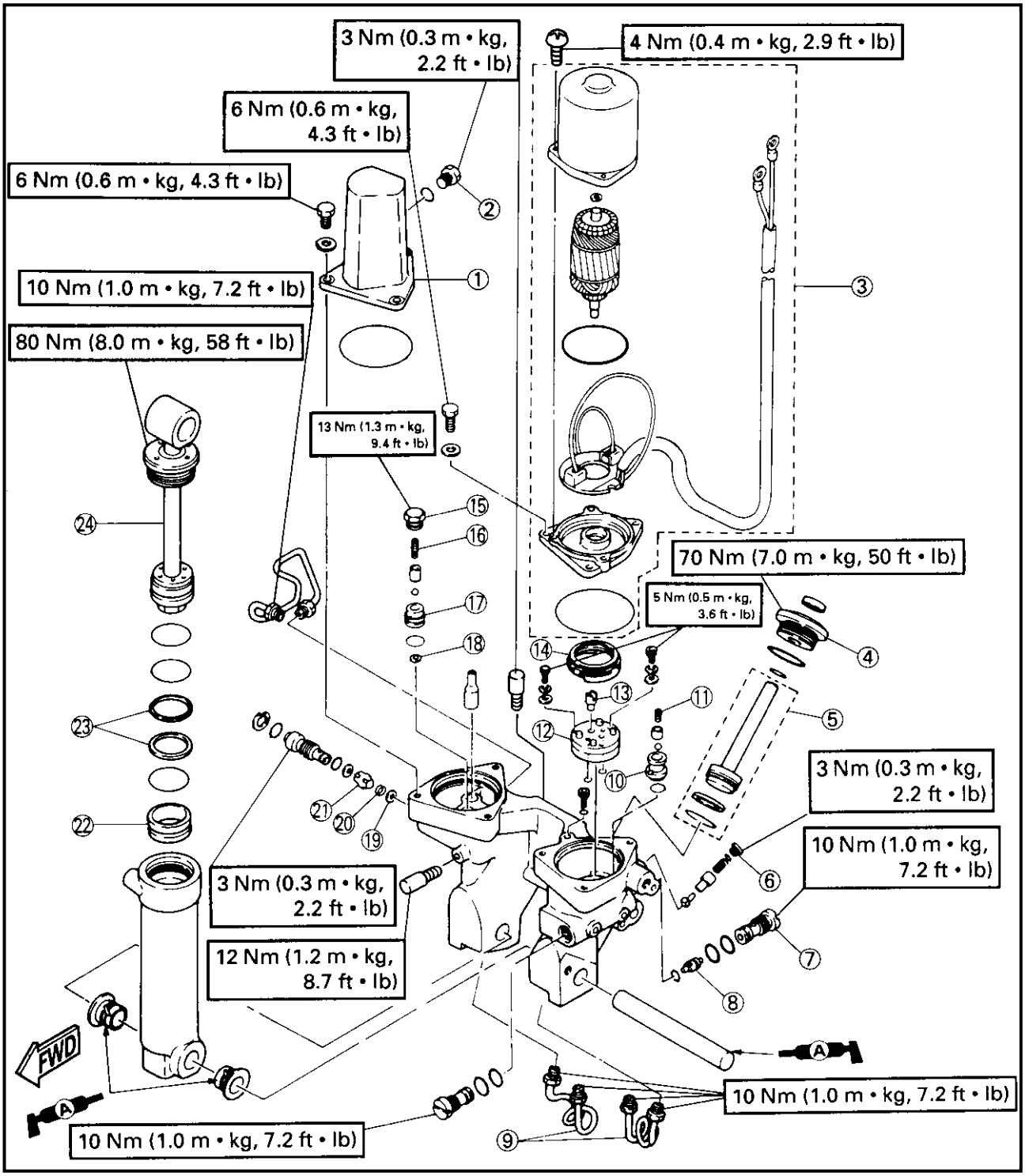

① Power trim and tilt motor
② Gear pump
③ Down-relief valve (48 kg/cm^2)
④ Main valve
⑤ 2-way check valve
⑥ Reservoir
⑦ Up-relief valve (40 kg/cm^2)
⑧ Manual valve
⑨ Tilt cylinder
⑩ Absorber valve (80 kg/cm^2)
⑪ Free piston
⑫ Trim cylinder

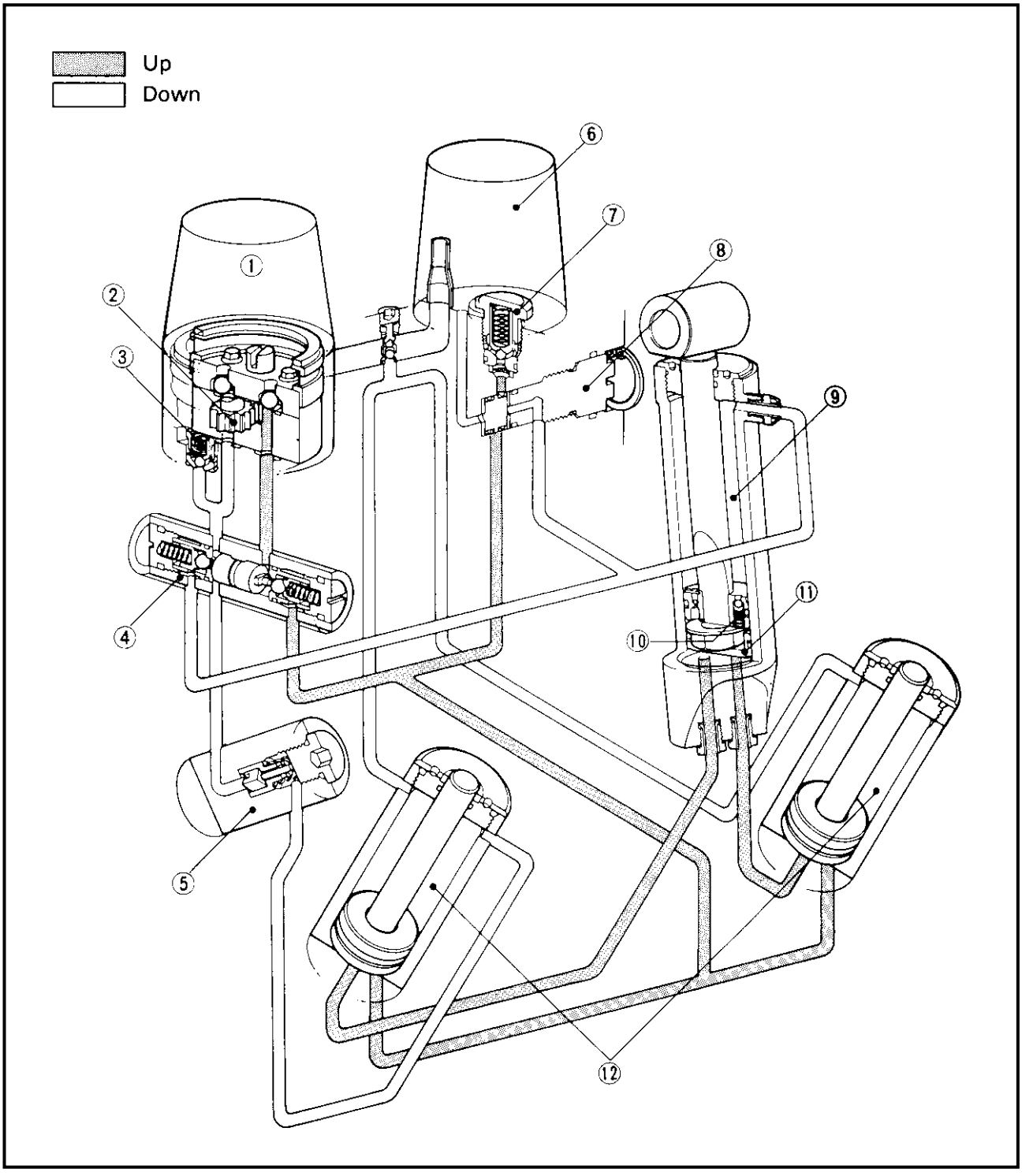

K52002-0

DISASSEMBLY

CAUTION:

1. Do not wipe components of the hydraulic system with rags or paper tissues, etc., as fibers entering the system will cause malfunction.
2. After removing the tilt-motor or oil-reservoir, do not depress the tilt-rod or trim-rod, since this may cause hydraulic fluid to be ejected from the port.

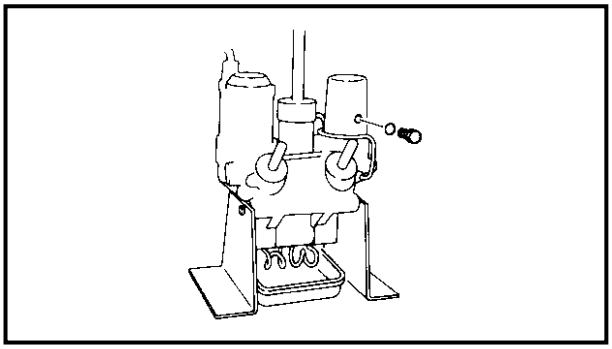

1. Turn the manual valve fully towards the manual position.
2. Remove the hydraulic-fluid level-plug and drain the hydraulic-fluid.
3. Remove the delivery pipes and drain the hydraulic-fluid.
4. Remove the hydraulic-fluid reservoir and the tilt-motor.

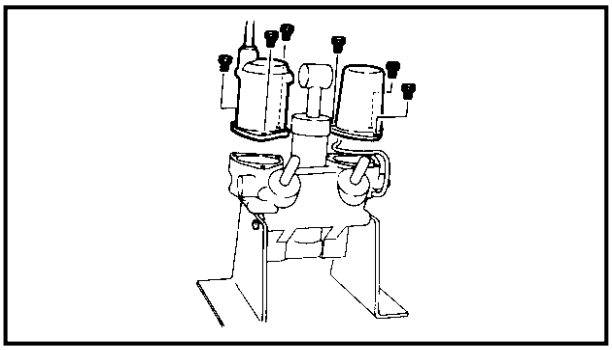

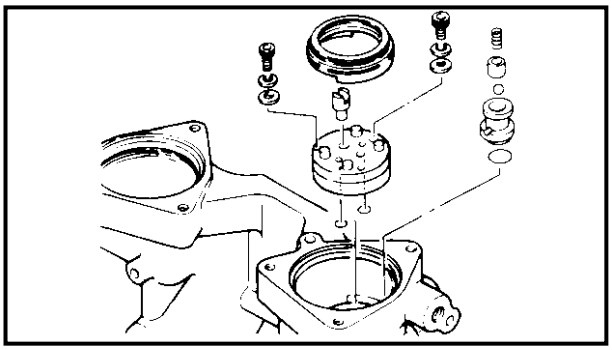

5. Remove the shaft connector.
6. Remove the filter and the gear-pump.
7. Remove the O-rings and the complete down relief-valve.

CAUTION:

Do not disassemble the gear-pump unit which is factory-adjusted, but replace the complete gear-pump unit if necessary.

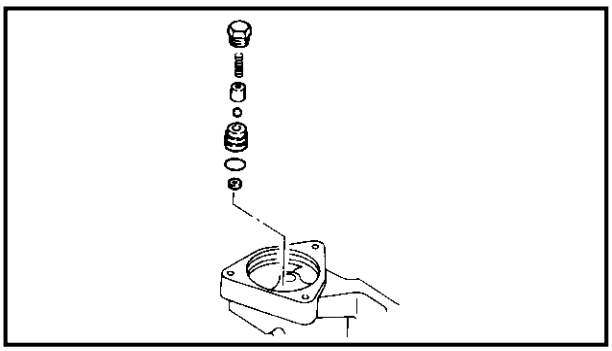

8. Loosen the bolt and remove the complete up-relief valve.

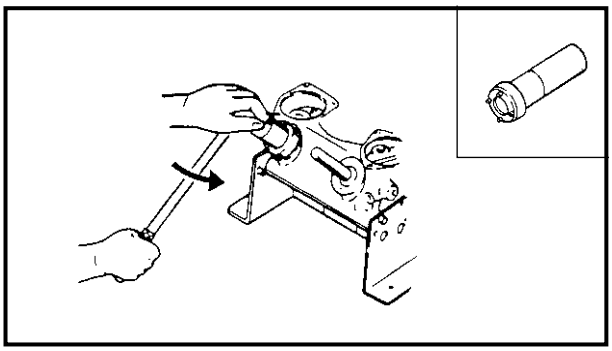

9. Using the special service tool, loosen the trim-cylinder end-screw and pull out the trim-piston and components.

	Cylinder end screw wrench: YB-6175-1A/90890-06542

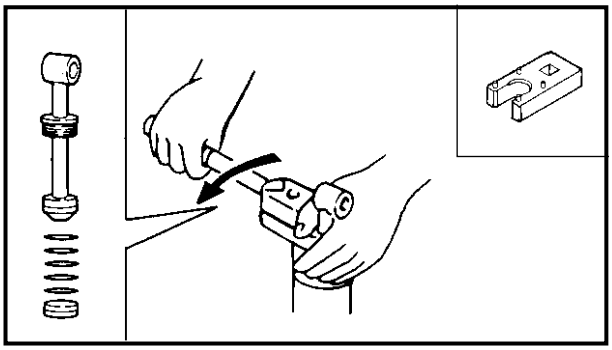

10. Using the special service tool, loosen the tilt-cylinder end-screw and pull out the tile-piston and the free-piston.

⚠ WARNING

The free-piston can be removed easily by blowing compressed air into the drain-hole of the cylinder. Be sure to cover the open end of the cylinder with a rag to prevent the free-piston from being ejected, which could cause injury or piston damage.

	Cylinder end screw wrench: YB-6175-2B/90890-06544

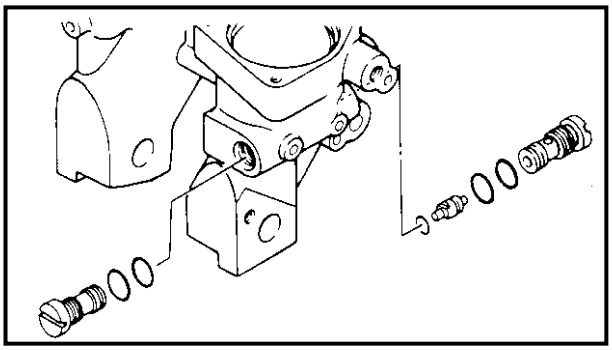

11. Remove the main valves and the shuttle-piston.

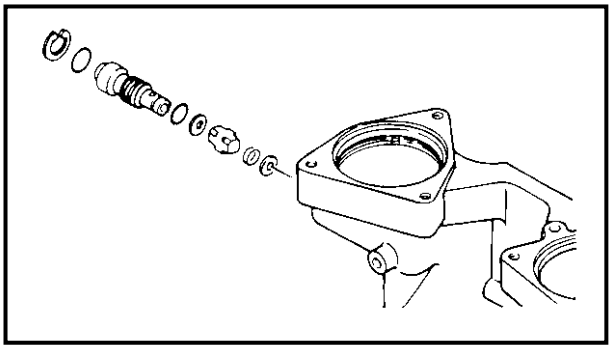

12. Remove the circlip, the manual-valve and components.

NOTE:

The manual-valve screw is threaded left handed.

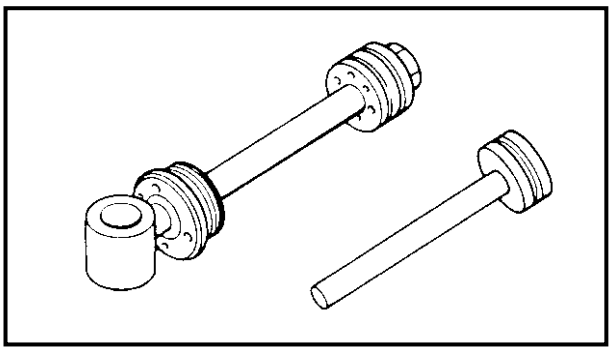

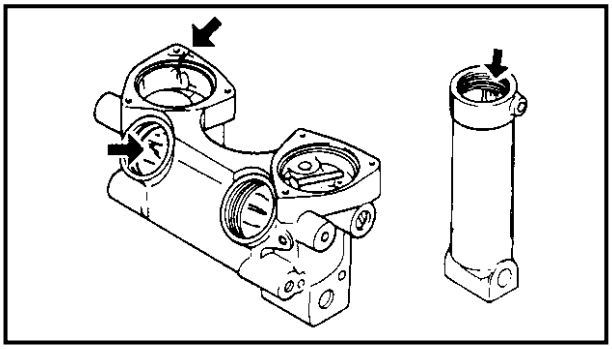

K53000-0

INSPECTION

TILT-ROD AND TRIM-ROD

1. Clean these components using a soft brush and solvent and inspect them carefully. If there are light scratches on the surfaces, these may be polished off using fine wet-or-dry sandpaper (440 ~ 600 grit), but if there is excessive scratching, replace the components.
2. Clean all the parts thoroughly using a soft brush and solvent and dry them with compressed air.
3. Inspect the tilt-cylinder and pump-unit and replace them if they are badly corroded.

K54000-0

ASSEMBLY

NOTE:

The components in this assembly are to be lightly coated with hydraulic fluid before assembly.

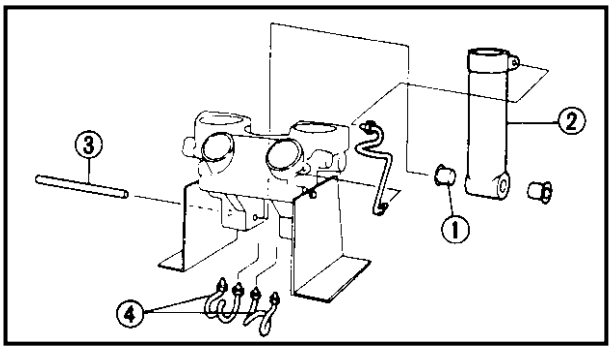

1. Install the tilt-cylinder and the delivery pipes.

① Bushing
② Tilt-cylinder
③ Lower mount pin
④ Delivery pipe

NOTE:

Feed oil into each pipe.

	Lock nut (delivery pipe): **10 Nm (1.0 m • kg, 7.2 ft • lb)**

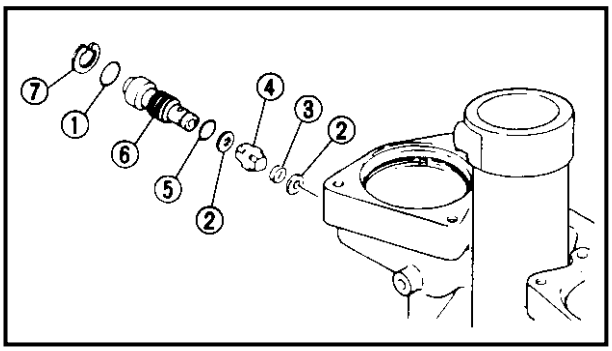

2. Install the manual-valve in the body with new O-rings.

① O-ring (fitted into the body)
② Manual valve seat
③ Manual release spring
(L = 6.0 mm, D = 11.5 mm)
④ Adapter 1
⑤ O-ring
⑥ Manual valve (left-handed thread)
⑦ Circlip

	Manual valve: **3 Nm (0.3 m • kg, 2.2 ft • lb)**

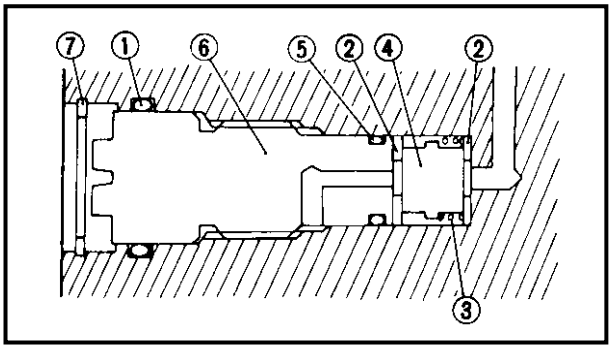

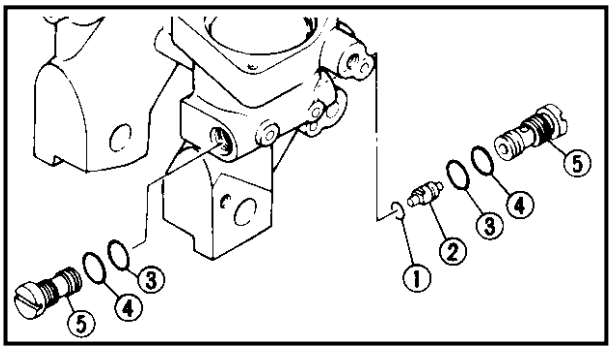

3. Install a new O-ring on the shuttle-piston, insert the piston into the body, then install the main valves with new O-rings.

① O-ring
② Shuttle-piston
③ O-ring
④ O-ring
⑤ Main valve

	Main valve: **10 Nm (1.0 m • kg, 7.2 ft • lb)**

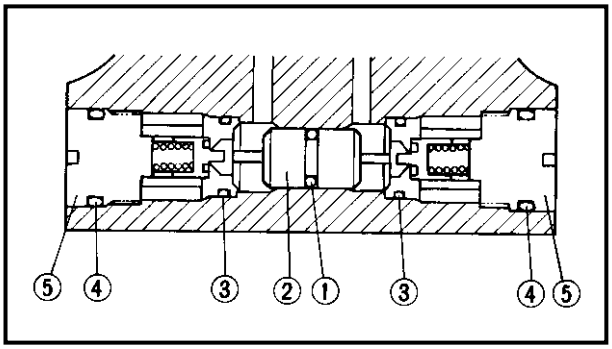

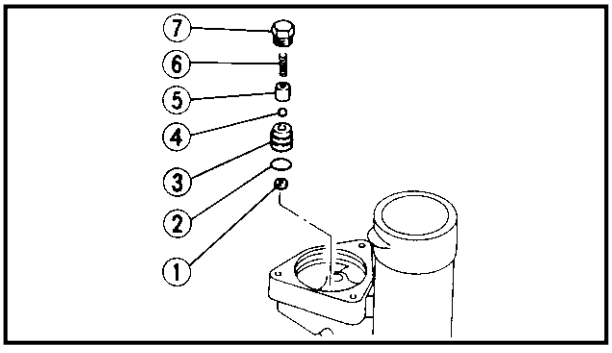

4. Install the up-relief valve with a new O-ring and tighten the locking-bolt to the specified torque.

① Filter
② O-ring
③ Up relief valve seat
④ Ball
⑤ Valve support pin
⑥ Up relief spring (L = 19.7 mm, D = 5 mm)
⑦ Up relief valve lock screw

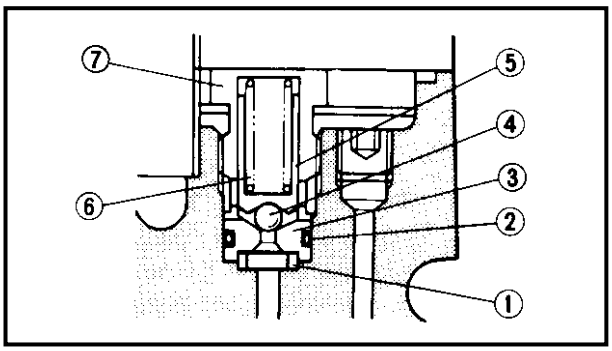

Locking bolt:
13 Nm (1.3 m • kg, 9.4 ft • lb)

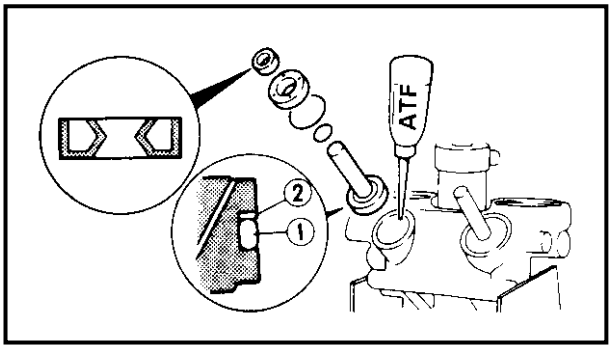

5. Fit a new O-ring and the back-up ring to the trim-piston, fit new O-rings and a new oil-seal to the end-screw and install the complete trim-piston in the cylinder. Fill the cylinder with hydraulic fluid and install and tighten the end-screw to the specified torque.

ATF
(automatic transmission fluid)

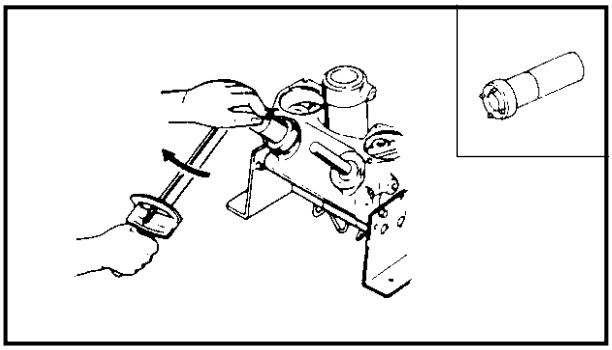

① O-ring
② Back-up ring

Trim cylinder end screw:
70 Nm (7.0 m • kg, 50 ft • lb)

Cylinder end screw wrench:
YB-6175-1A/90890-6548

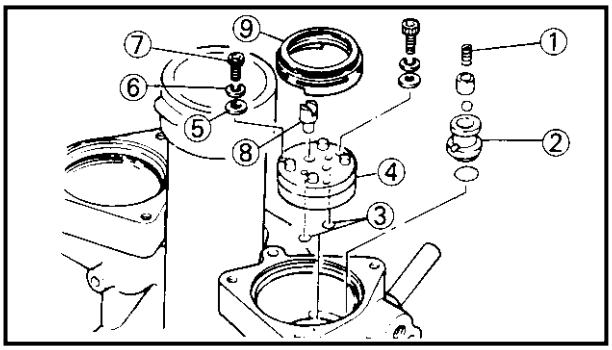

6. Install the down relief-valve and the complete gear-pump with new O-rings, tighten the screws and fit the shaft connector and filter, then fill with hydraulic fluid.

① Down relief spring (L = 13 mm, D = 6.1 mm)
② Down relief valve seat
③ O-rings
④ Gear pump
⑤ Washer
⑥ Washer
⑦ Screw (Use hexagon wrench)
⑧ Shaft connector
⑨ Filter

Gear pump mounting screw:
5 Nm (0.5 m • kg, 3.6 ft • lb)

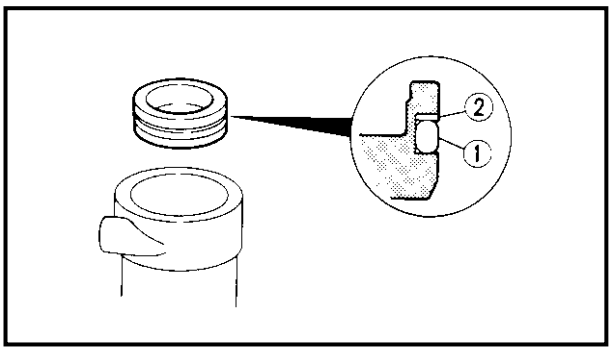

7. Fit a new O-ring and the back-up ring on the free-piston and install it into the cylinder.

① O-ring
② Back-up ring

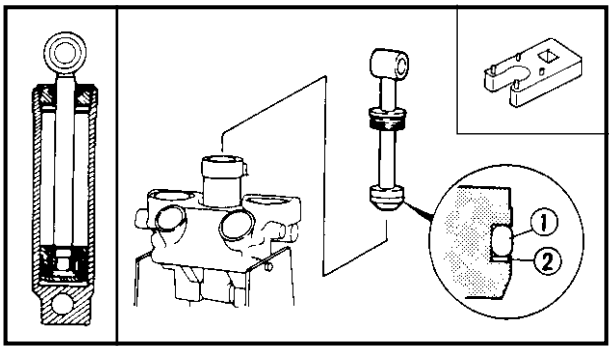

8. Fit a new O-ring and the back-up ring to the tilt-piston and install it into the cylinder.
   Fill the cylinder with hydraulic fluid and tighten the end-screw to the specified torque.

① O-ring
② Back-up ring

	Cylinder end screw wrench: YB-6175-2B/90890-06544
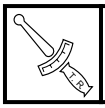	**Tilt cylinder end screw: 80 Nm (8.0 m • kg, 58 ft • lb)**

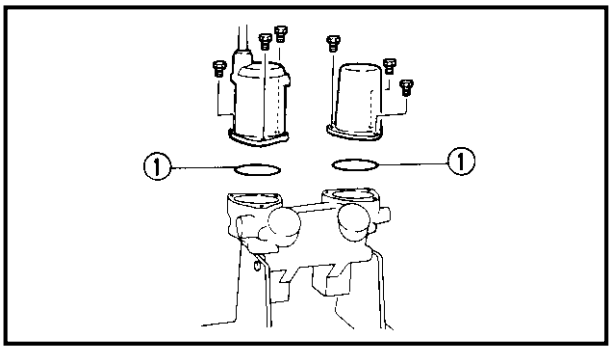

9. Align the connector-shaft keyway with the motor-shaft projection and install the motor with new O-ring.

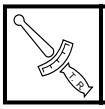	**Bolt (tilt motor): 4 Nm (0.4 m • kg, 2.9 ft • lb)**

10. Install the hydraulic-fluid reservoir with new O-ring.

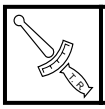	**Bolt (reservoir body): 6 Nm (0.6 m • kg, 4.3 ft • lb)**

① O-ring

11. Air bleeding. Refer to page 7-28.

EXPLODED DIAGRAM (Long transom [6H1-15], [62F-02])

① Reservoir body
② Reservoir plug
③ Motor assembly
④ Trim cylinder end screw
⑤ Trim piston assembly
⑥ Main valve assembly
⑦ Shuttle piston
⑧ Pipe
⑨ Main valve seal
⑩ Valve support pin
⑪ Down relief spring
⑫ Gear pump assembly
⑬ Shaft connector
⑭ Filter 1
⑮ Valve lock screw
⑯ Trim spring
⑰ Up relief spring
⑱ Up relief valve seat
⑲ Filter 2
⑳ Manual valve seat
㉑ Manual release spring
㉒ Adapter
㉓ Manual release screw
㉔ Free piston
㉕ Back up ring

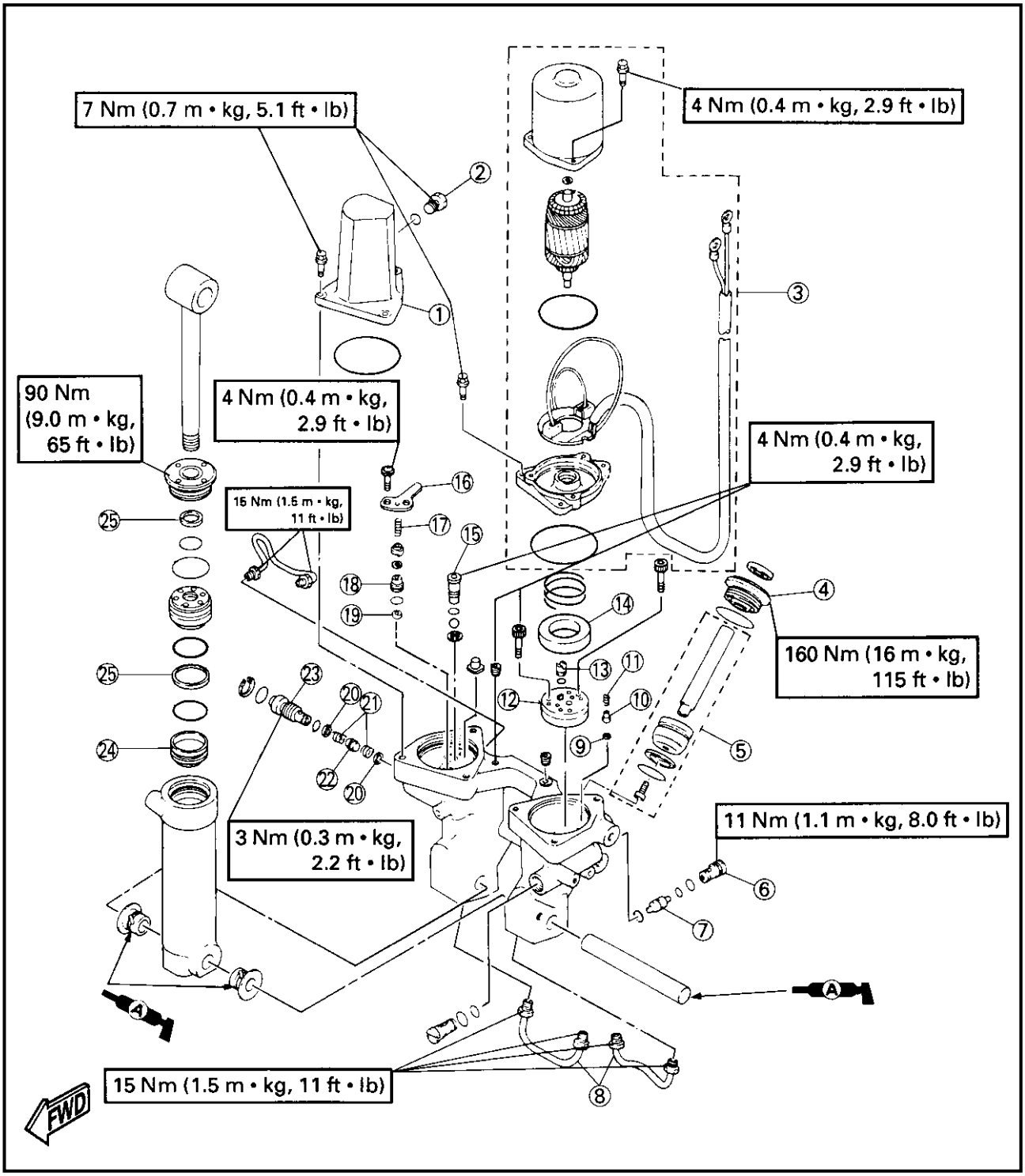

① Trim down valve (0.2 kg/cm^2)
② Trim down valve (1 kg/cm^2)
③ Reservoir
④ Up-relief valve (100 kg/cm^2)
⑤ Manual valve
⑥ Tilt cylinder
⑦ Absorber valve (180 kg/cm^2)
⑧ Trim cylinder
⑨ Main valve (0.5 kg/cm^2)
⑩ Down-relief valve (30 kg/cm^2)
⑪ Gear pump
⑫ Power trim and tilt motor

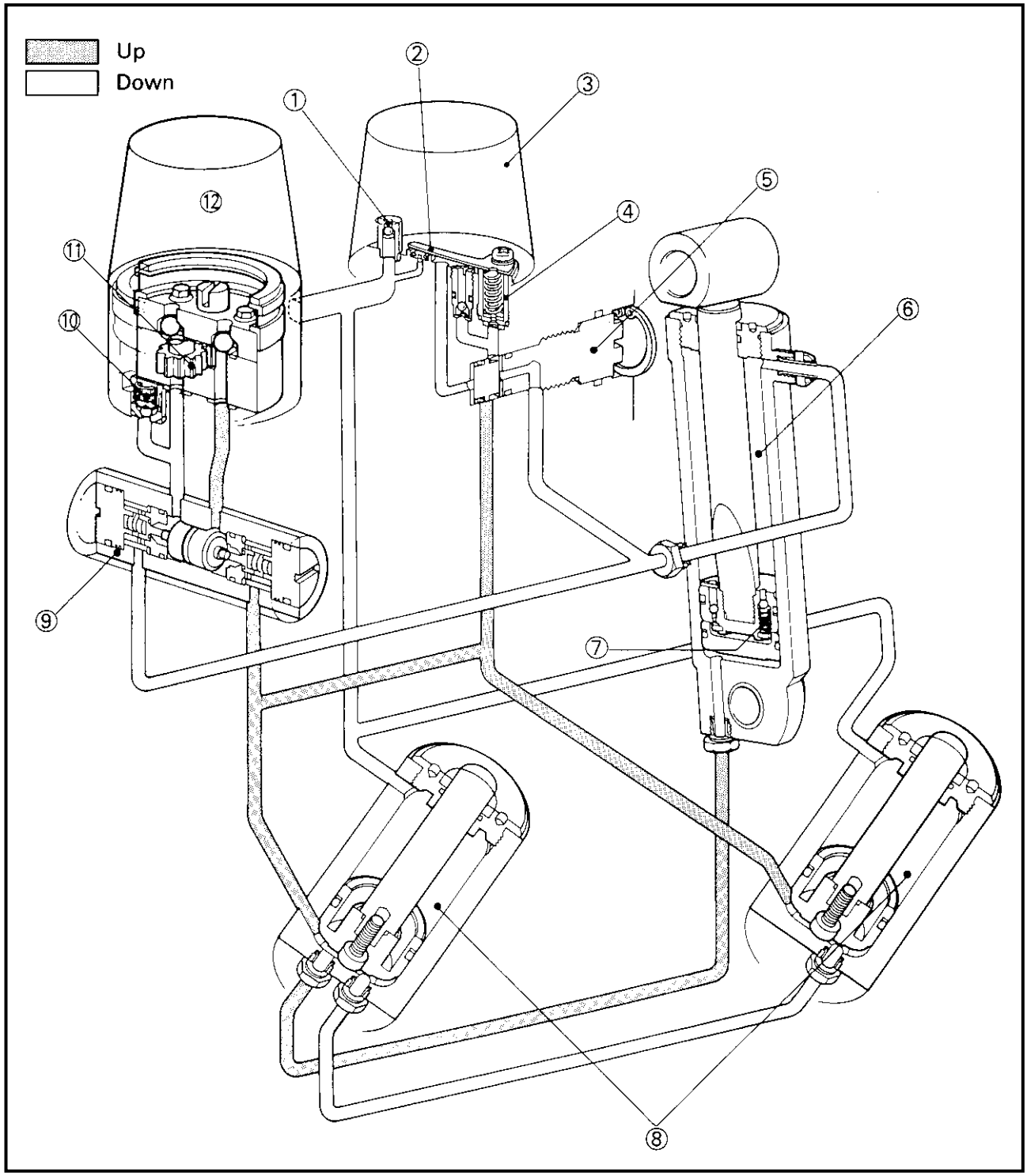

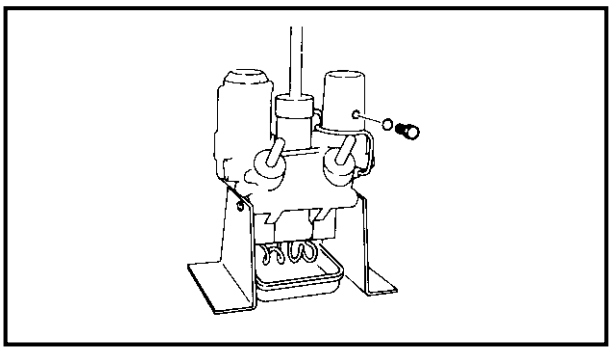

K52002-0

DISASSEMBLY

CAUTION:

1. Do not wipe components of the hydraulic system with rags or paper tissues, etc., as fibers entering the system will cause malfunction.
2. After removing the tilt-motor or oil-reservoir, do not depress the tilt-rod or trim-rod which may cause hydraulic fluid to be ejected from the port.

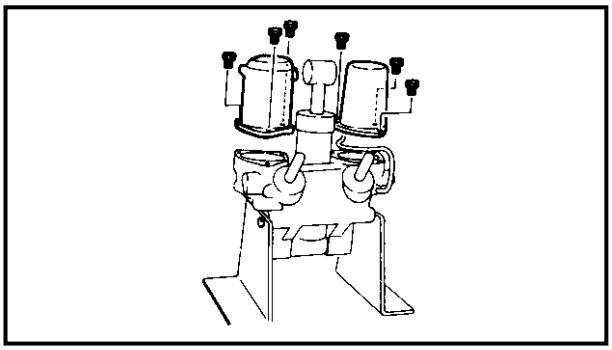

1. Turn the manual valve fully towards the manual position.
2. Remove the delivery pipes and the hydraulic-fluid level-plug.
3. Remove the hydraulic-fluid reservoir and the tilt-motor.
4. Remove the shaft connector.

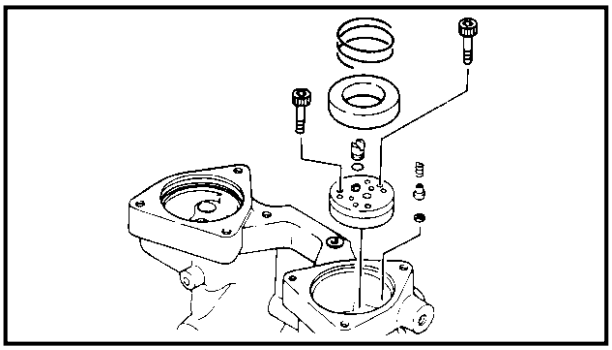

5. Remove the filter and the gear-pump.
6. Remove the O-rings and the complete down relief-valve.

CAUTION:

Do not disassemble the gear-pump unit which is factory-adjusted, but replace the complete gear-pump unit if necessary.

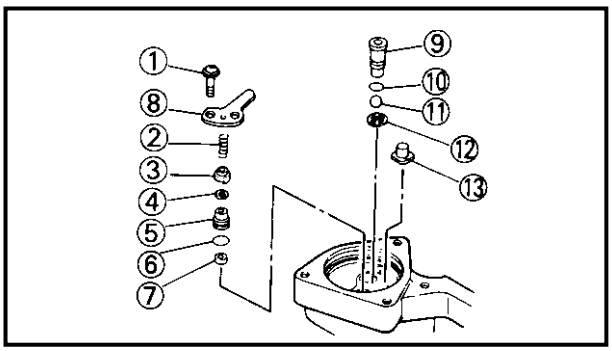

7. Loosen the screw and remove the complete up-relief valve.

① Screw
② Up relief spring
③ Valve support pin
④ Relief valve seal
⑤ Relief valve seat
⑥ O-ring
⑦ Filter
⑧ Trim spring

8. Remove the one-way valve and main valve seal.

⑨ Valve lock screw
⑩ O-ring
⑪ Ball
⑫ Washer
⑬ Main valve seal

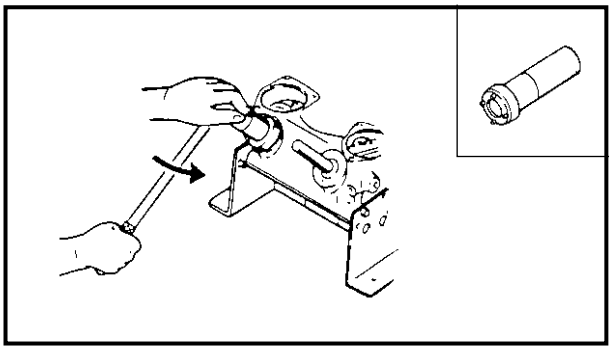

9. Loosen the trim-cylinder end-screw and pull out the trim-piston and components.

	Cylinder end screw wrench: YB-6175-1A/90890-6548

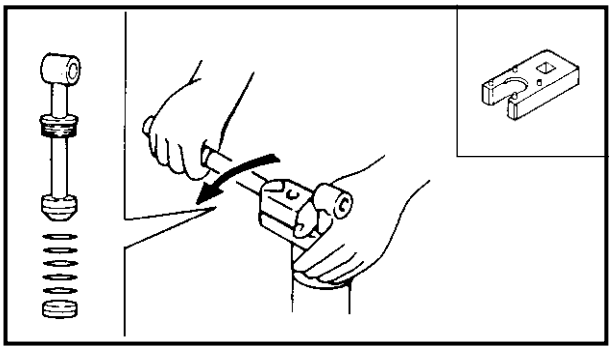

10. Loosen the tilt-cylinder end-screw and pull out the tilt-piston and the free-piston.

⚠ WARNING

The free-piston can be removed easily by blowing compressed air into the drain-hole of the cylinder. Be sure to cover the open end of the cylinder with a rag to prevent the free-piston from being ejected, which could cause injury or piston damage.

	Cylinder end screw wrench: YB-6175-2B/90890-06544

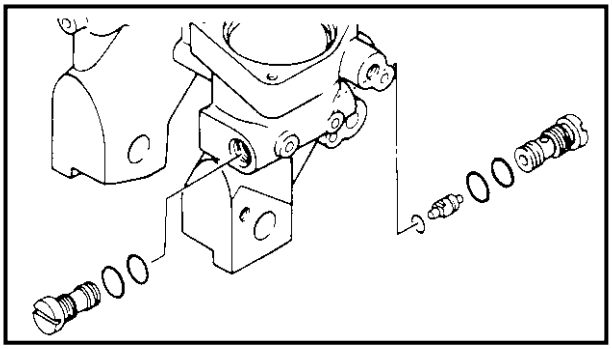

11. Remove the main valves and the shuttle-piston.

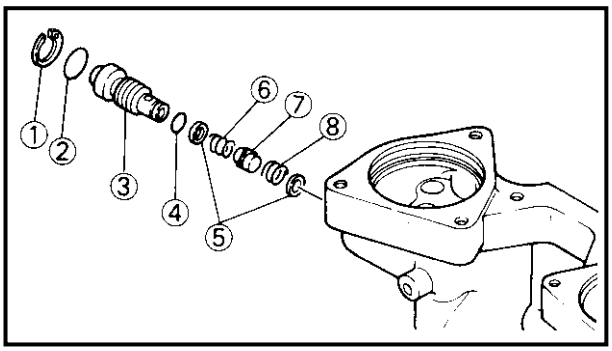

12. Remove the circlip and the manual valve and components.

① Snap ring
② O-ring
③ Manual release screw
④ O-ring
⑤ Manual valve seat
⑥ Manual release spring 1
⑦ Adapter 1
⑧ Manual release spring 2

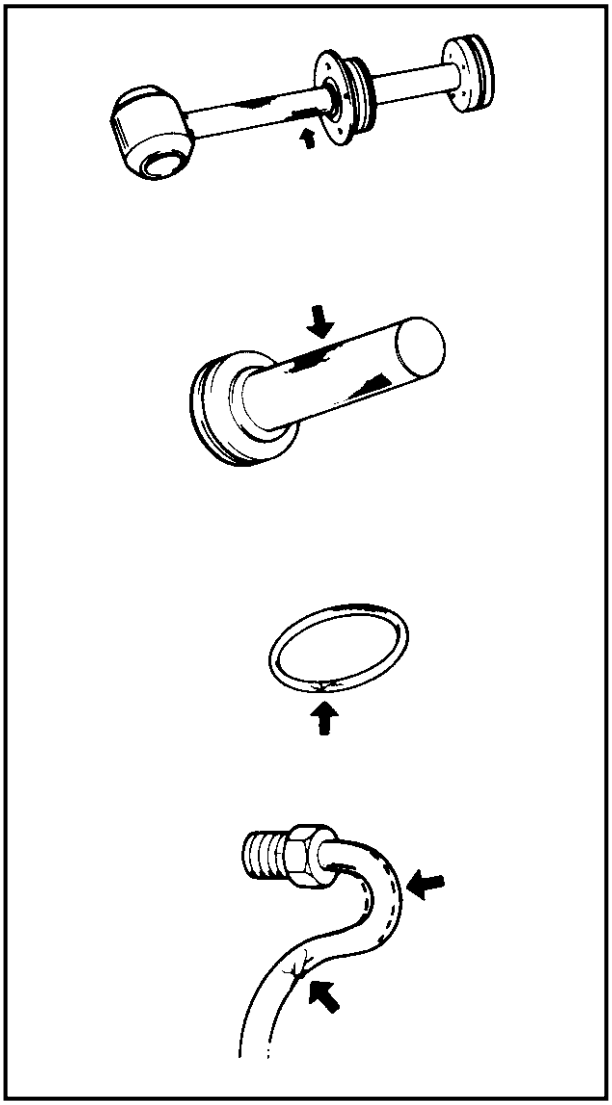

K53000-0

INSPECTION

TILT-ROD AND TRIM-ROD

1. Clean these components using a soft brush and solvent and inspect them carefully. If there are light scratches on the surfaces, these may be polished off using fine wet-or-dry sandpaper (440 ~ 600 grit), but if there is excessive scratching, replace the components.

2. Clean all the parts thoroughly using a soft brush and solvent and dry them with compressed air.

3. Inspect the tilt-cylinder and pump-unit and replace them if they are badly corroded.

K54001-0*

ASSEMBLY

NOTE:

The components in this assembly are to be lightly coated with hydraulic fluid before assembly.

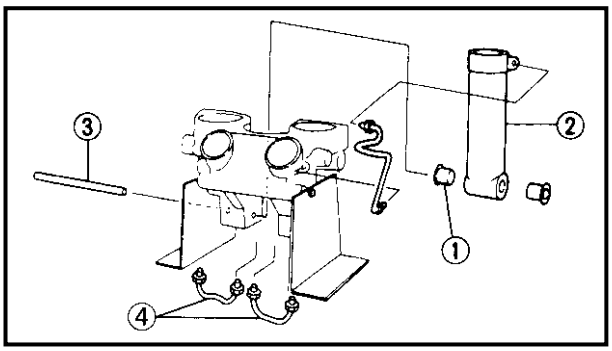

1. Install the tilt-cylinder and the delivery pipes.

① Bushing
② Tilt-cylinder
③ Lower mount pin
④ Delivery pipe

NOTE:
Feed oil into each pipe.

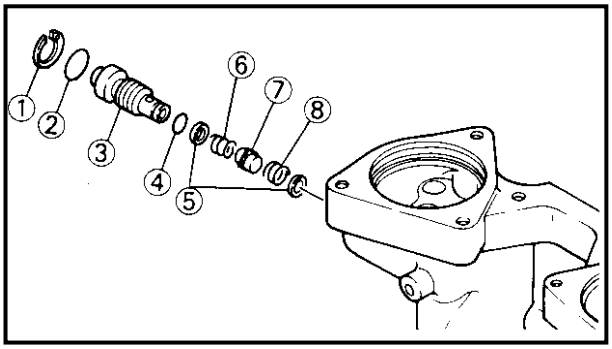

	Lock nut (delivery pipe): **15 Nm (1.5 m • kg, 11 ft • lb)**

2. Install the manual-valve in the body with new O-rings.

① Snap ring
② O-ring
③ Manual release screw
④ O-ring
⑤ Manual valve seat
⑥ Manual release spring (ø0.6 mm)
⑦ Adapter 1
⑧ Manual release spring (ø1.2 mm)

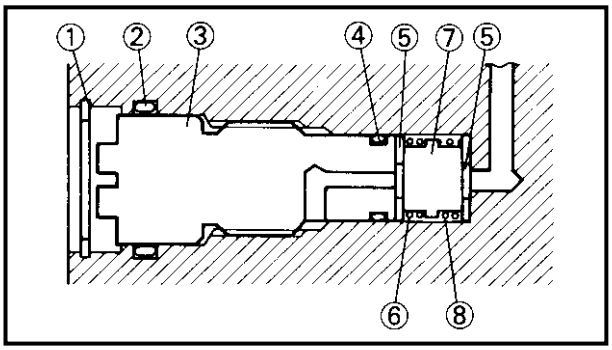

	Manual valve: **3 Nm (0.3 m • kg, 2.2 ft • lb)**

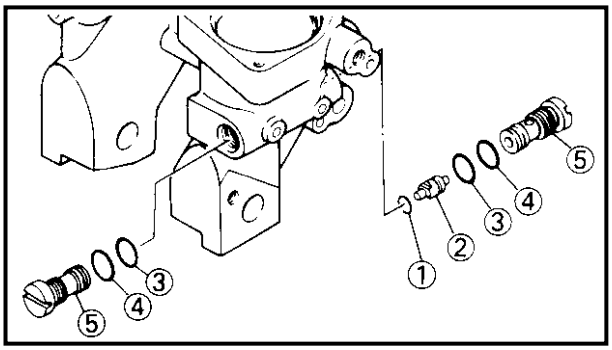

3. Install a new O-ring on the shuttle-piston and insert the piston into the body, then install the main valves with new O-rings.

① O-ring
② Shuttle-piston
③ O-ring
④ O-ring
⑤ Main valve

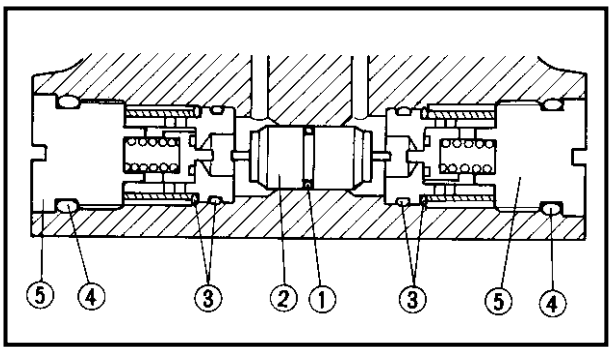

	Main valve: **11 Nm (1.1 m • kg, 8.0 ft • lb)**

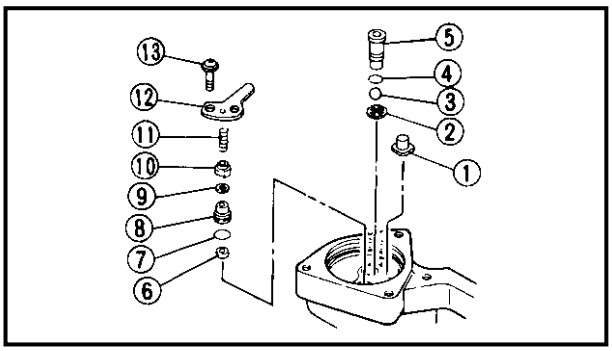

4. Install the up-relief valve and the valve lock screw with new O-rings and tighten the screw to the specified torque.

① Main valve seal
② Washer
③ Ball
④ O-ring
⑤ Valve lock screw
⑥ Filter
⑦ O-ring
⑧ Up relief valve seat
⑨ Up relief valve seal
⑩ Valve support pin
⑪ Up relief spring
⑫ Trim spring
⑬ Screw

Valve lock screw:
4 Nm (0.4 m • kg, 2.9 ft • lb)
Screw:
4 Nm (0.4 m • kg, 2.9 ft • lb)

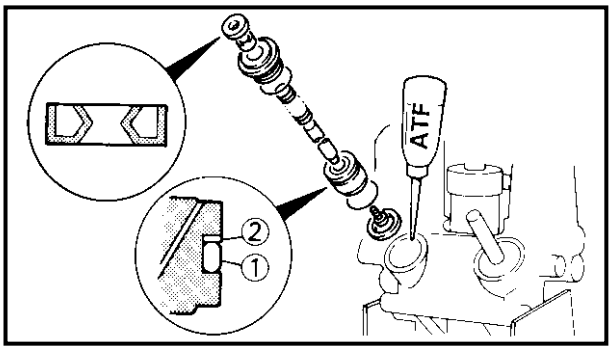

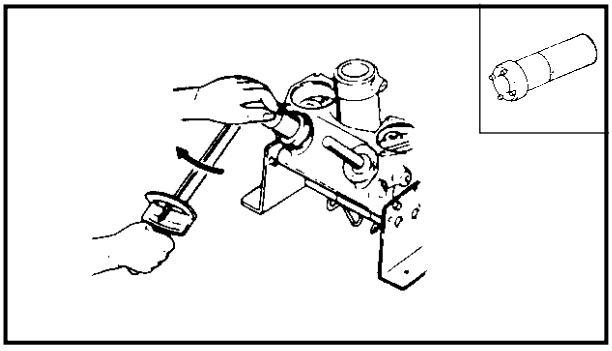

5. Fit a new O-ring and the back-up ring on the trim-piston, fit new O-rings and a new oil-seal on the end-screw and install the complete trim-piston in the cylinder. Fill the cylinder with hydraulic fluid and install and tighten the end-screw to the specified torque.

ATF
(automatic transmission fluid)

① O-ring
② Back-up ring

End-screw (trim cylinder):
160 Nm (16 m • kg, 115 ft • lb)

Cylinder end screw wrench:
YB-6175-1A/90890-6548

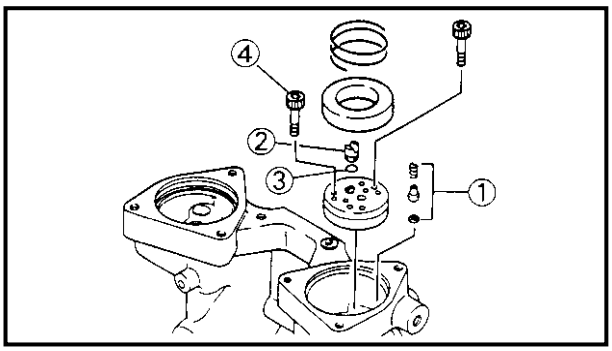

6. Install the down relief-valve and the gear-pump complete with new O-rings, tighten the bolts, and fit the connector-shaft and filter, then fill with hydraulic fluid.

① Down relief-valve assembly
② Shaft-connector
③ O-ring
④ Bolt

	Bolt: **4 Nm (0.4 m • kg, 2.9 ft • lb)**

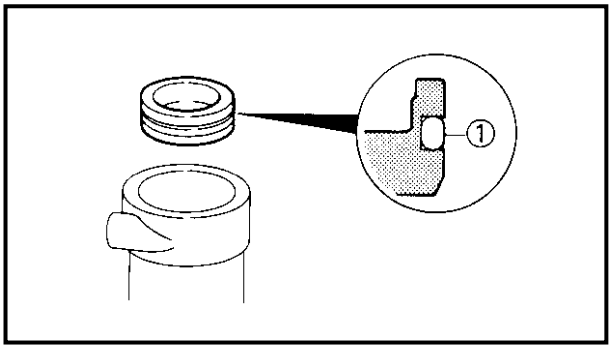

7. Fit a new O-ring on the free-piston and install it into the cylinder.

① O-ring

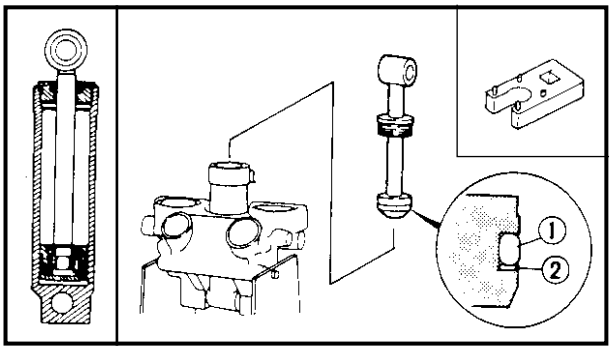

8. Fit a new O-ring and the back-up ring to the tilt-piston and install the piston in the cylinder. Fill the cylinder with hydraulic fluid and tighten the end-screw to the specified torque.

① O-ring
② Back-up ring

	End-screw (tilt cylinder): **90 Nm (9.0 m • kg, 65 ft • lb)**
	Cylinder end screw wrench: **YB-6175-2B/90890-06544**

9. Align the connector-shaft keyway with the motor-shaft projection and install the motor with a new O-ring.

	Bolt (tilt motor): **4 Nm (0.4 m • kg, 2.9 ft • lb)**

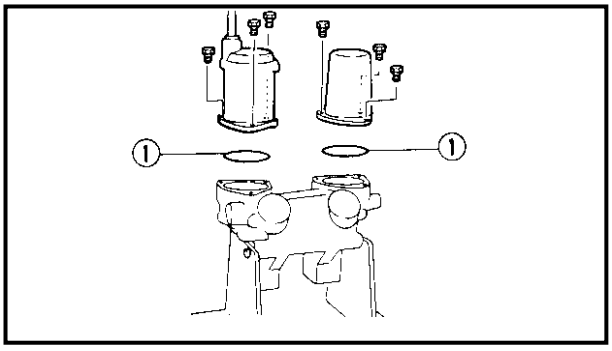

10. Install the hydraulic-fluid reservoir with a new O-ring.

	Bolt (reservoir body): **7 Nm (0.7 m • kg, 5.1 ft • lb)**

① O-ring

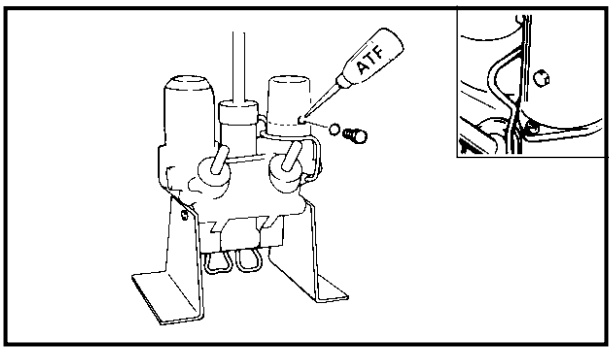

FILLING WITH HYDRAULIC FLUID AND AIR-BLEEDING

1. Pour in the fluid until it overflows from the fluid-level plug-hole and install the reservoir plug.

	ATF **(automatic transmission fluid)**

2. Turn the manual-valve fully towards manual-tilt. Depress the tilt-rod fully, then close the manual valve. Use the motor to go fully up, check hydraulic and top if necessary. Open the manual valve and repeat these operations two or three times. Then, turn the manual-valve fully towards power-tilt.

3. Check the level of the hydraulic fluid at full tilt up, top up with fluid if necessary. Insert and tighten the fluid-level plug.

4. Connect the leads to a battery to check the function.

Trim and tilt up	**Blue (+)**
	Green (–)
Trim and tilt down	**Green (+)**
	Blue (–)

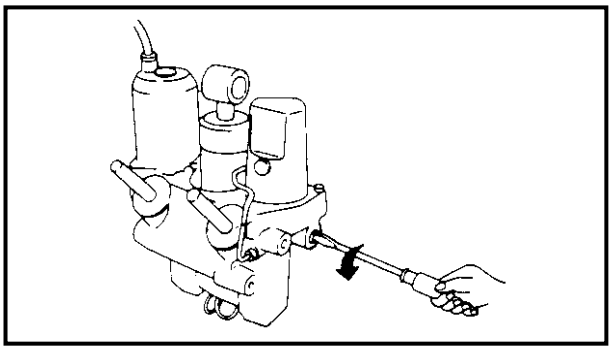

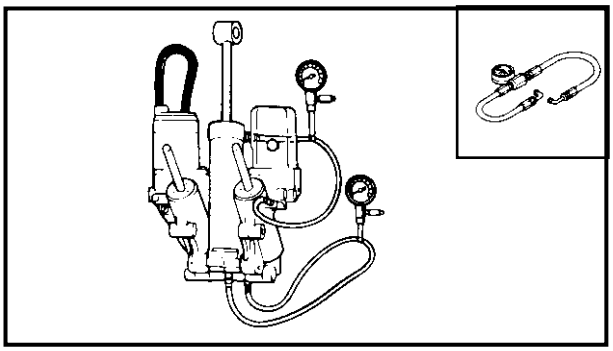

K55506-0*

HYDRAULIC FLUID PRESSURE TEST

Drive the motor to check trim and tilt up and down operation and fluid leakage.

1. Close the manual valve.

2. Connect the pressure gauge.

NOTE:

- Feed hydraulic fluid into each pipe while taking care not to allow air to enter.
- Two set of hoses are required so that both of the trim and tilt pressures can be measured at the same time.

	Pressure gauge: **YB-6181**

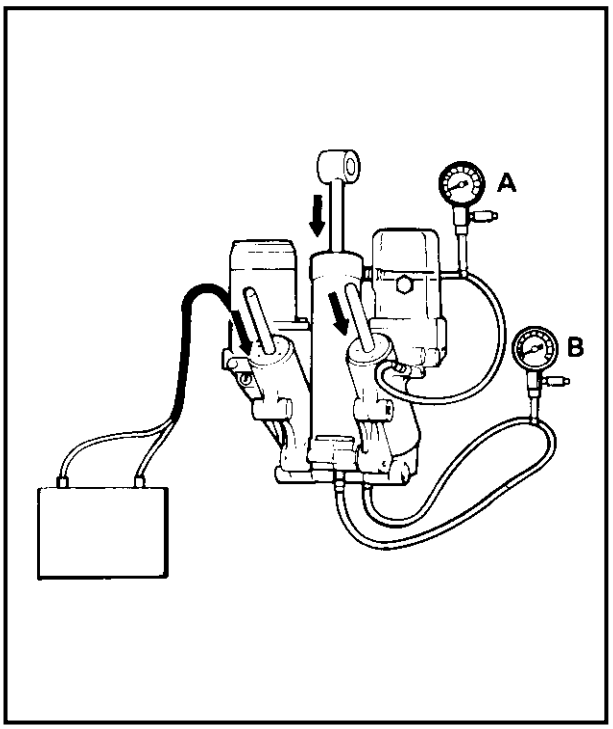

3. Connect the leads to a battery to check the fluid discharge pressure during down-operation.

Trim and tilt down ..... Green (+)	**Blue (–)**

CAUTION:

The motor should not be operated for more than three seconds after trim and tilt down is completed.

A: Tilt operating pressure
B: Trim operating pressure

At the end of down operation:
[Stamped mark]
[6H308]
A: 4,100 ~ 5,500 kPa
(41 ~ 55 kg/cm^2, 583 ~ 782 psi)
B: 600 ~ 1,100 kPa
(6 ~ 11 kg/cm^2, 85 ~ 157 psi)
[6H1-15]
A: 2,200 ~ 3,800 kPa
(22 ~ 38 kg/cm^2, 313 ~ 540 psi)
B: 600 ~ 1,100 kPa
(6 ~ 11 kg/cm^2, 85 ~ 157 psi)
[62F-02]
A: 2,100 ~ 3,700 kPa
(21 ~ 37 kg/cm^2, 299 ~ 526 psi)
B: 600 ~ 1,100 kPa
(6 ~ 11 kg/cm^2, 85 ~ 157 psi)

4. Connect the leads to a battery to check the fluid discharge pressure during up-operation.

Trim and tilt up..... Blue (+)	**Green (–)**

NOTE:

The motor should not be operated for more than fourteen seconds after full tilt up-operation.

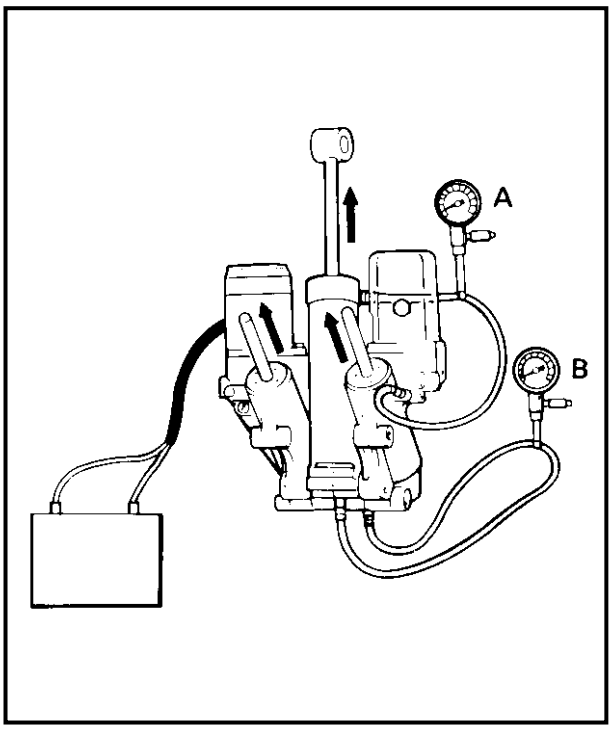

A: Tilt operating pressure
B: Trim operating pressure

During up operation pressure:
A: 0 ~ 500 kPa
(0 ~ 5 kg/cm², 0 ~ 71 psi)
B: 0 ~ 500 kPa
(0 ~ 5 kg/cm², 0 ~ 71 psi)
At the end of up-operation pressure:
A: 0 kPa (0 kg/cm², 0 psi)
[6H308]
B: 3,500 ~ 4,500 kPa
(35 ~ 45 kg/cm², 500 ~ 640 psi)
[6H1-15]
B: 9,000 ~ 11,000 kPa
(90 ~ 110 kg/cm², 1,280 ~ 1,565 psi)
[62F-02]
B: 5,690 ~ 6,570 kPa
(57 ~ 66 kg/cm², 299 ~ 526 psi)

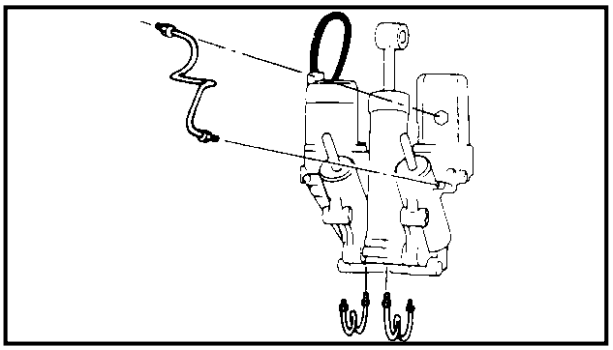

5. Remove the fluid pressure gauge and install the delivery pipes.

NOTE:
When the fluid pressure gauge has been removed, be sure to bleed the air from the system.

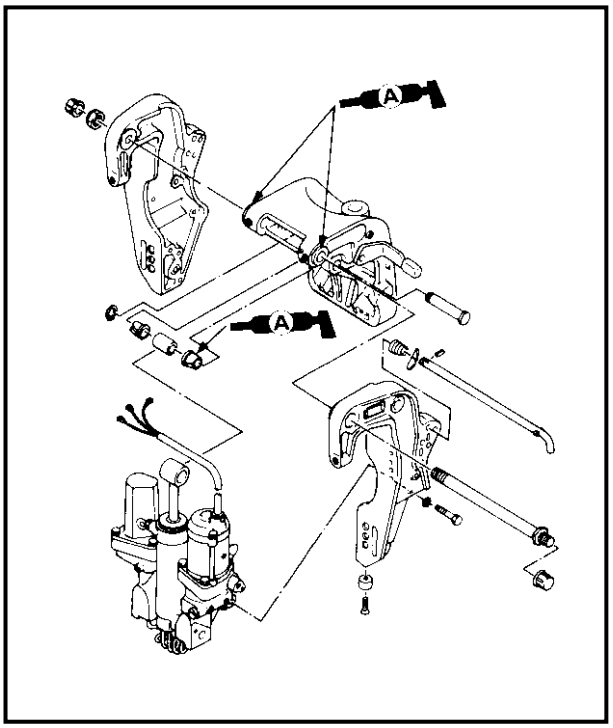

K56000-0

INSTALLATION

1. Referring to the illustration, install the power trim and tilt unit to the bracket.

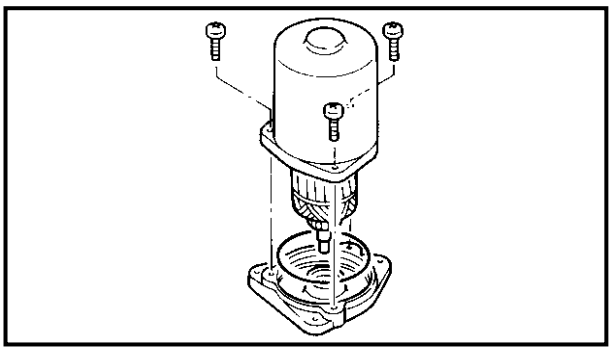

POWER TRIM AND TILT MOTOR
DISASSEMBLY
1. Loosen the screws and remove the stator, O-ring and the armature.

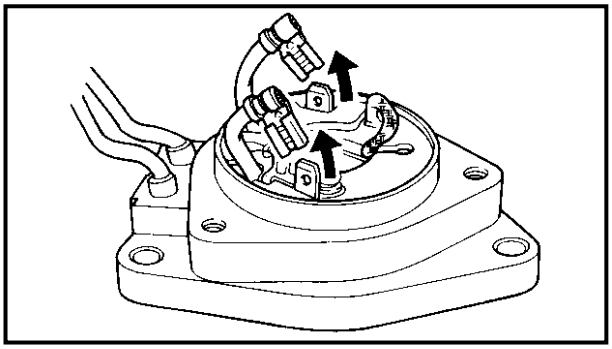

2. Disconnect the connector.

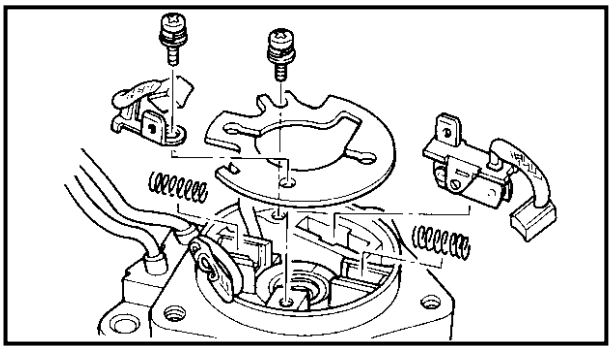

3. Loosen the screw and remove the brush, cover plate, circuit breaker and the spring.

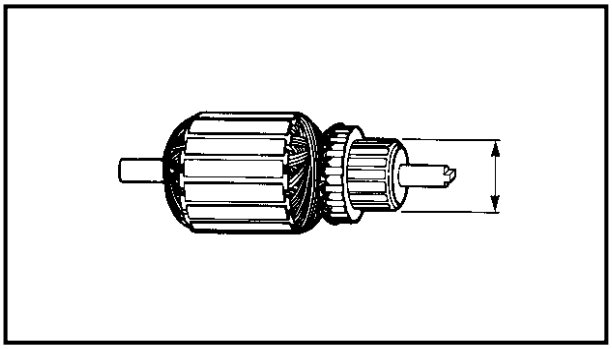

K62001-0*

INSPECTION
ARMATURE COIL
1. Visually inspect the commutator surface and if it shows signs of roughness, polish it with 600-grit wet-or-dry sandpaper.

2. Measure the outside diameter of the commutator by use of a vernier caliper. If the diameter is less than the specified minimum outside diameter, replace the whole armature.

Armature minimum outside diameter:
Standard: 22 mm (0.87 in)
Minimum: 21 mm (0.83 in)

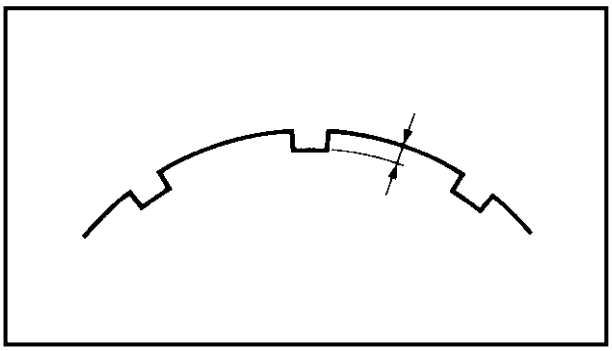

3. Scrape between the segments with a hack-saw blade and then carefully remove all particles of metal and mica with compressed air.

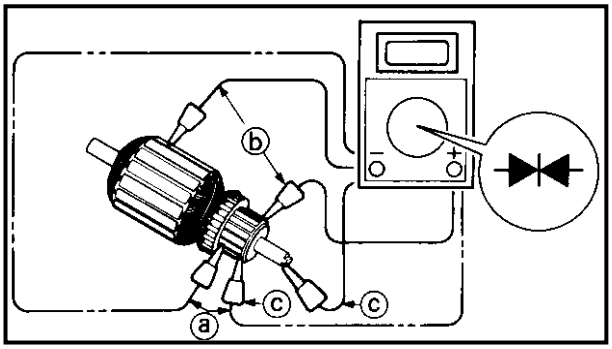

4. Check for continuity or discontinuity of the armature coil. If it is out of specification, replace the armature.

Armature coil continuity/ discontinuity	
Commutator segments ⓐ	**Continuity**
Segment-Laminations ⓑ	**Discontinuity**
Segment-Shaft ⓒ	**Discontinuity**

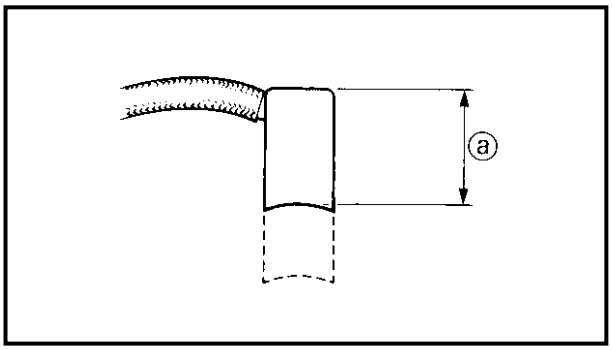

BRUSH

1. Measure the brushes for wear.

Brush, size ⓐ:
Standard: 9.8 mm (0.39 in)
Minimum: 4.8 mm (0.19 in)

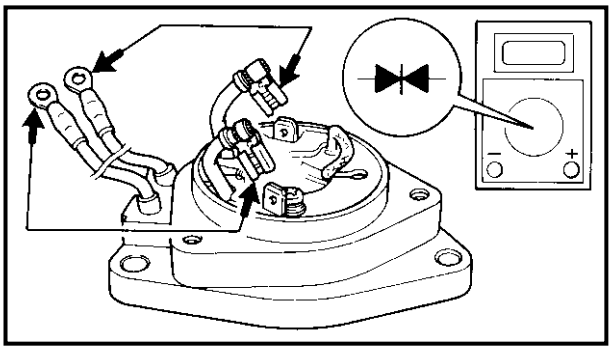

BASE ASSEMBLY

1. Inspect the base assembly for cracks or burns and replace the base assembly if such are found.
2. Check for continuity between the connector and lead wire. If there is discontinuity, replace the base assembly.

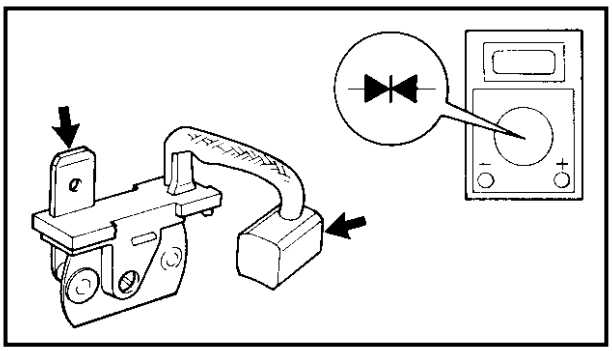

CIRCUIT BREAKER

1. Check for continuity between the brush and the terminal. If there is discontinuity, replace the circuit breaker.

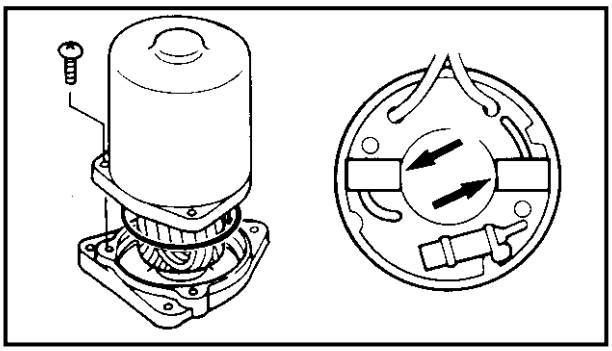

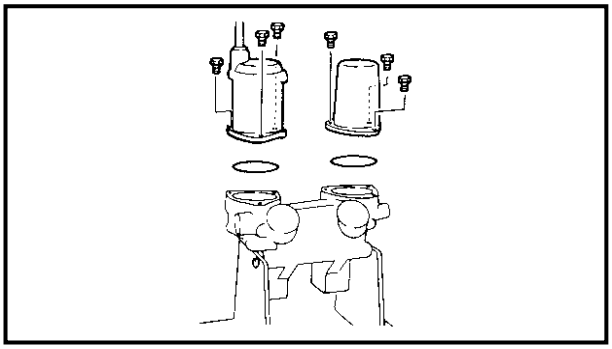

K63000-0*

ASSEMBLY

1. Install the armature into the frame-end.
2. Place the O-ring on the frame-end and install the yoke assembly, then install the screws.

Screw:
4 Nm (0.4 m • kg, 2.9 ft • lb)

3. Place the O-ring on the motor assembly and align the grooves of the motor assembly and gear pump, then install the bolts.

Power trim and tilt motor mounting bolt:
[Stamped mark]
[6H308]
6 Nm (0.6 m • kg, 4.3 ft • lb)
[6H1-15], [62F-02]
7 Nm (0.7 m • kg, 5.1 ft • lb)